Chemilizer

A Medicator is only as Strong as its Motor

Longest-Lasting Motor in the Industry

The Chemilizer is the only medicator in the industry to combine diaphragm pump technology and chemical by-pass design. These 2 features result in the most durable motor in the animal production industry.

The Original Diaphragm Pump

The Chemilizer is the first pump to use diaphragm technology. The diaphragm pump is your best option when working with a low flow or tough water source. Pump pond and well water without the use of a filter.

By-Pass Chemical Injection Design

Most medicators on the market today expose their motors to corrosive chemicals, damaging the motor and leading to costly repairs or replacements. With the by-pass chemical injection design of the Chemilizer, the motor is protected from the corrosive chemicals and lasts longer.

Features and Benefits

- Water driven pump, no electricity required
- The diaphragm design works with tough water sources
- The by-pass injection and Silicone and Viton components decrease chances of chemical corrosion
- Low-cost, minimal maintenance required
- Available in six different dilution ratios

Specs

Housing	Polypropylene
Water Pressure	3-85 PSI, 0.2-5.8 bar
Water Flow	.02-11 GPM, 5-2,500 l/h
Maximum Temperature	100º F (38º C)
Minimum Temperature	34º F (1º C)
Max. vertical suction of concentrate	12 ft./3.6 m.
Max. horizontal suction of concentrate	50 ft./15 m.
Self-priming	Yes
Seal material available*	Silicone , Viton
Maximum Viscosity	1.500 cP (Ex. Honey)
Recommended Accessories	Check valve, pressure regulator, flow restrictor
Thread Sizes Available	3/4" NPT/GHT/BSP

*Contact your representative for specific chemical information

Watch Online Demo

#098200

Pump pond and well water without a filter!

PALS™
Supplier Of Choice

Authorized Inependent HydroSystem Distributor

www.palsusa.com

1-800-328-8842

The Gasket Pump

New, Heavy-Duty Gasket Pump

The Chemilizer's new Gasket Pump lasts longer with less maintenance.

- Increased durability due to the greater surface area of the gasket
- No O-rings or silicone inside the sleeve
- Thicker gasket material stands up to the harshest chemicals in the industry

Chemilizers

Model #	Description
CH9000-209	Fixed 1:128 Injector
CH9000-210	Fixed 1:100 Injector
CH9000-AV2 US	Adjustable 50:1-164:1 Injector

Replacement Pumps

P/N	Description
FG9209V	Viton 1:128 Replacement Pump
FG9210V	Viton 1:100 Replacement Pump
10095989	Adj. 50:1-164:1 Replacement Pump

Pump Rebuild Kits

P/N	Description
FG9209V	Viton 1:128 Rebuild Kit
FG9210V	Viton 1:100 Rebuild Kit
10095989	Adj. 50:1-164:1 Rebuild Kit

Stem Only

P/N	Description
FG9209V	Viton 1:128 Stem
FG9210V	Viton 1:100 Stem
10095989	Adj. 50:1-164:1 Stem

Adjustable Pump, 10095989
50:1 - 164:1, 2% - 0.6%
#098273

Replacement Pumps
#098230

Pump Rebuild Kits
#098242

Diaphragm Assembly
#098250

Check Disks 1%
#098241

Motor Rebuild Kit
#098247

Kynar Sleeve
#098249

To learn more if the Chemilizer is right for you, call us at 800.543.7184 or email us at contact-hydro@hydrosystemsco.com.

Hydro systems A DOVER COMPANY

hydrosystemsco.com

1-800-328-8842

DOSATRON®
WATER POWERED DOSING TECHNOLOGY

DM11F - 11 GPM

Dilution Range:	1:128 fixed (.8%)
Water Flow Range:	.02 to 11 GPM
Operating Pressure Range:	1.5 to 85 PSI
Available Housing Materials:	Polypropylene (Standard Blue)
Dimensions:	16” x 7”
Weight:	5 lbs
Connection Size:	3/4” NPT
Maximum Temperature:	104° F
Included Accessories:	6 ft clear suction tube, strainer, weight, mounting bracket and operating manual
Recommended Accessories:	200 mesh filter

Stock #: 097900

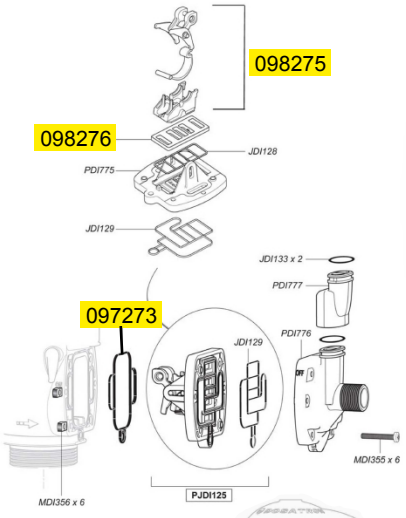

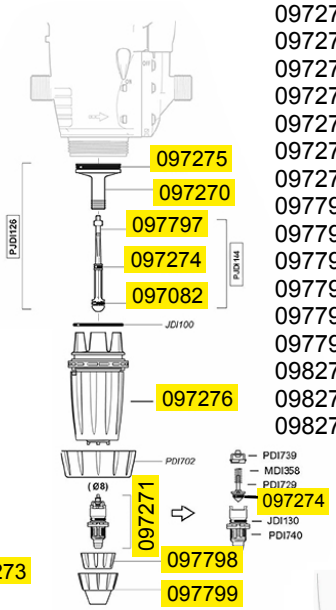

097082…DOSATRON PLUNGER SEAL
097270…DOSATRON DM11 ISOLATION BODY
097271…DOSATRON DM11 CHECK VALVE
097272…DOSATRON DM11 O-RING SEAL 8J040
097273…DOSATRON DM11F DIAPHRAM SUB ASSY
097274…DOSATRON DM11F PLUNGER MID SECTION O-RING
097275…DOSATRON DM11F O-RING SEAL
097276…DOSATRON DM11F NEW STYLE INJ STEM BLK (PDI784U)
097793…DOSATRON DM11F AIR BLEED KEY PDI782
097794…DOSATRON DM11F AIR BLEED O-RING SEAL JDI030
097795…DOSATRON DM11F AIR BLEED SPRING MDI365
097797…DOSATRON DM11F PLUNGER W/O SEALS
097798…DOSATRON DM11F NUT PDI734
097799…DOSATRON DM11F NUT PDI735
098274…DOSATRON DM11F ACTUATOR BLADE SPRING
098275…DOSATRON DM11F SLIDING VALVE (OLD PDI767)
098276…DOSATRON DM11F CERAMIC PLATE

VISIT DOSATRONUSA.COM FOR COMPLETE SCHEMATICS AND REPAIR PARTS

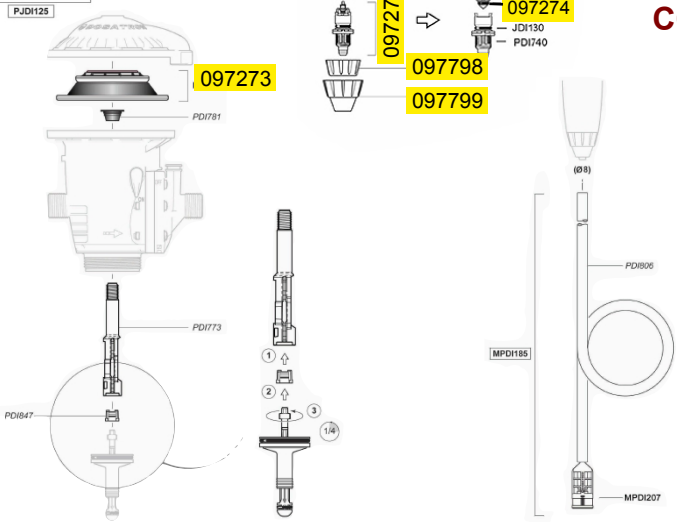

D128R - 7 GPM

Dilution Range:	1:200/1:128/1:100 (.5% to 1%) Pre-set at 1:128
Water Flow Range:	.09 to 7 GPM
Operating Pressure Range:	7 to 70 PSI
Available Housing Materials:	Polyacetal (Standard blue)
Dimensions:	13” x 6 1/4”
Weight:	4 lbs
Connection Size:	3/4” NPT
Maximum Temperature:	104° F
Included Accessories:	6 ft clear suction tube, strainer, weight, mounting bracket and operating manual
Recommended Accessories:	200 mesh filter, check valve, pressure regulator, flow restrictor.

Stock #: 097070

DOSATRON®

D128R Dosatron Parts Breakdown

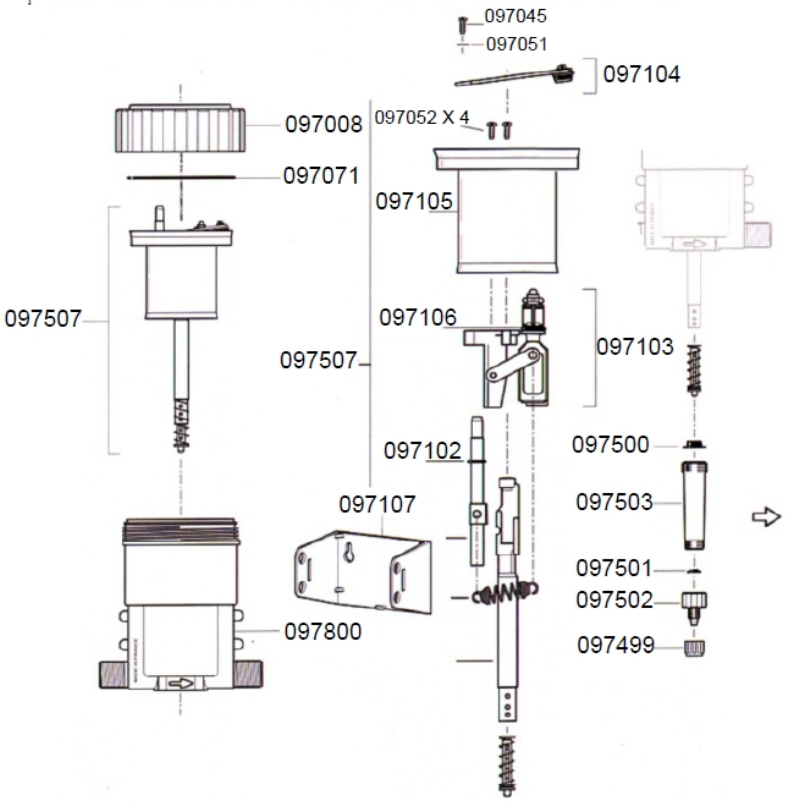

097008…DOSATRON 7GPM TOP CAP (COVER) W/O BY-PASS
097071…DOSATRON TOP CAP O-RING SEAL
097507…DOSATRON D128R/7GPM COMPLETE PISTON W/PLUNGER
097800…DOSATRON D128R PUMP BODY-BLUE
097107…DOSATRON MOUNTING BRK’T PLASTIC7/11GPM
097045…DOSATRON SS SCREW (SHORT)
097051…DOSATRON SS WASHER
097104…DOSATRON 7GPM WISHBONE SPRING VALVE ASSY VT SEALS
097052…DOSATRON SS SCREW (SHORT)
097105…DOSATRON 7GPM PISTON SHELL
097106…DOSATRON OUTPUT VALVE SEAL
097103…DOSATRON 7GPM ACTUATOR ASSY W/J007 HT O-RING
097102…DOSATRON 7GPM PUSH ROD O-RING
097101…DOSATRON 7GPM PUSH ROD
097072…DOSATRON 7GPM ACTUATOR SPRING
097073…DOSATRON D128R PISTON ROD PLUNGER
097500…DOSATRON D128R TOP SEAL (VT)
097503…DOSATRON D128R BLACK STEM SLEEVE 1-5%
097501…DOSATRON D128R BOTTOM SEAL (VT)
097502…DOSATRON D128R STEM CAP NEW TYPE
097499…DOSATRON LOCKING NUT 6MM SUCTION HOSE
097506…DOSATRON D128R VALVE SLIDE SPRING
097504…DOSATRON VALVE SLIDE PIN
097505…DOSATRON D128R SLIDE VALVE
097508…DOSATRON 6MM 6’ SUCTION HOSE 7/11 GPM

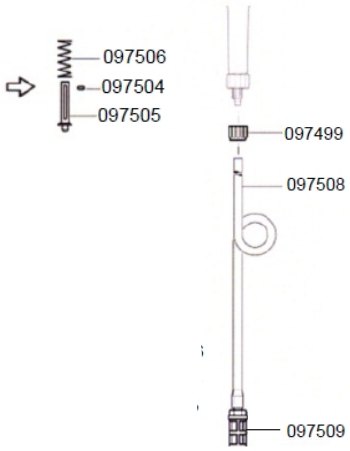

Stock #: 097600

D25F - 11 GPM

Dilution Range:	1:128 Fixed (.8%)
Water Flow Range:	.05 to 11 GPM
Operating Pressure Range:	4.3 to 85 PSI
Available Housing Materials:	• Polyacetal (Standard Blue) • PVDF (White)
Dimensions:	14” x 6 1/4”
Weight:	4 lbs
Connection Size:	3/4” NPT
Maximum Temperature:	104° F
Included Accessories:	6 ft clear suction tube, strainer, weight, mounting bracket and operating manual
Recommended Accessories:	200 mesh filter, check valve, pressure regulator, flow restrictor.

DOSATRON®

WATER POWERED DOSING TECHNOLOGY

097052…DOSATRON SS SCREW (SHORT)
097071…DOSATRON TOP CAP O-RING SEAL
097081…DOSATRON D25F PLUNGER
097082…DOSATRON D25F PLUNGER SEAL
097106…DOSATRON OUTPUT VALVE SEAL
097107…DOSATRON MOUNTING BRK’T PLASTIC 7/11GPM
097200…DOSATRON D25F CHECK VALVE SPRING/CONE ASSY
097202…DOSATRON D25F STANDARD CAP
097204…DOSATRON D25F SLEEVE O-RING
097206…DOSATRON D25F OUTPUT VALVE ASSY
097208…DOSATRON D25F ACTUATOR SPRING
097209…DOSATRON D25F ACTUATOR TOP O-RING
097210…DOSATRON D25F CHECK VALVE SEAL
097214…DOSATRON D25F SHELL
097216…DOSATRON D25F PUSH ROD O-RING
097218…DOSATRON D25F PUSH ROD
097220…DOSATRON D25F INJECTION SEAL KIT
097499…DOSATRON LOCKING NUT 6MM SUCTION HOSE
097508…DOSATRON 6MM 6’ SUCTION HOSE 7/11 GPM
097509…DOSATRON 6MM STRAINER

D25F Dosatron Parts Breakdown

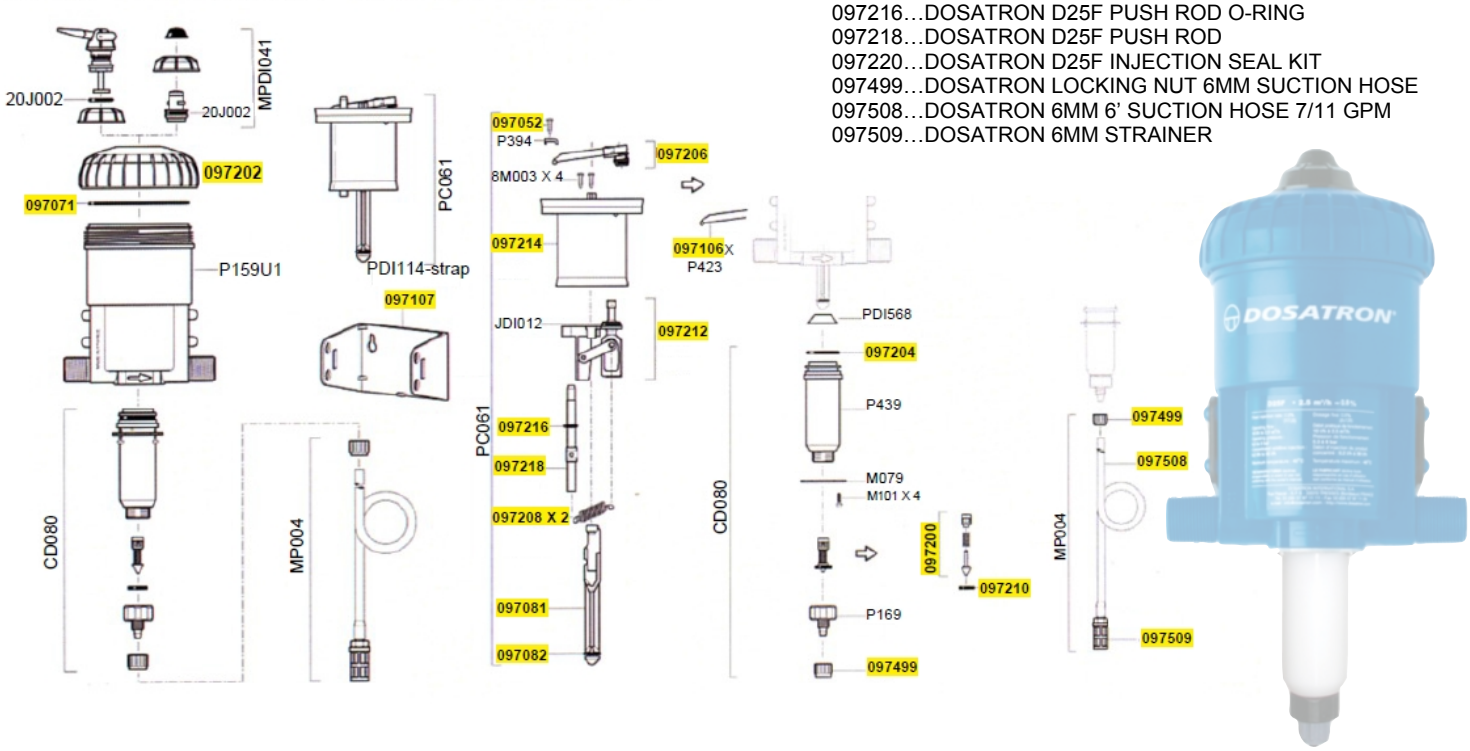

DOSATRON®
WATER POWERED DOSING TECHNOLOGY

Medicator RX

Maintain Your Medicator's Performance with Medicator Rx!

Before After

Use Medicator Rx on a regular basis to cleanse your medicator and remove:

- **Rust**
- **Mineral deposits**
- **Calcifications**

Medicator Rx lubricates your medicator's interior seals and all moving components as it cleans. Use it between medicating and vaccinating cycles, it's easy to use and acts as a cleanser when the medicator parts are soaked.

Medicator Rx:

- Provides lubrication where needed
- Helps lubricate seals
- Is quick and easy to use
- Requires no scrubbing
- Flushes
- Will not harm your medicator

Available in two convenient sizes:

Packet
Stock# 080823
- convenient .187 lb (85 grams) size. Just add one packet to one gallon water per medicator and soak for 24, and up to 48 hours for best results. Larger medicators use two packets in two gallons of water.

Economy Pail
Stock# 080824
- easy-to-use 3 lb. pail with lid. Add two (2) scoops to one gallon water per medicator and soak for 24, and up to 48 hours for best results.

Scan the QR Code to Learn

STENNER INJECTION PUMPS KEEP BIRDS HYDRATED AND HEALTHY

WELL PUMP ACTIVATED

Water Disinfection and pH Adjustment

Stock#: 098304

Classic Adjustable Pump

- Electromechanical
- Treat multiple locations

STENNER PUMP ADVANTAGES

- Inject directly into the water line; unrestricted flow to the drinker lines
- Unaffected by water quality, scale or solids
- Easy tube replacement without tools

PULSE WATER METER ACTIVATED

Water Disinfection and pH Adjustment

Proportional Injection System

- Varying flow rate applications
- Adjustable pump controller

Stock#: 098312

Econ Integrator™

- Compact with adjustable operating times
- One pulse meter can activate multiple Integrators™ and/or Stennicators

Water Additives 1:128

Stock#: 098012

M128

- Robust pump
- Adjustable pulse rates 1,2,4, or 10 ppg or 1 ppl

Stock#: 098313

Econ Stennicator

- Compact with adjustable pulse rates
- One pulse meter can activate multiple Stennicators and/or Integrators™

Installation example – Treat water and medicate utilizing one pulse water meter

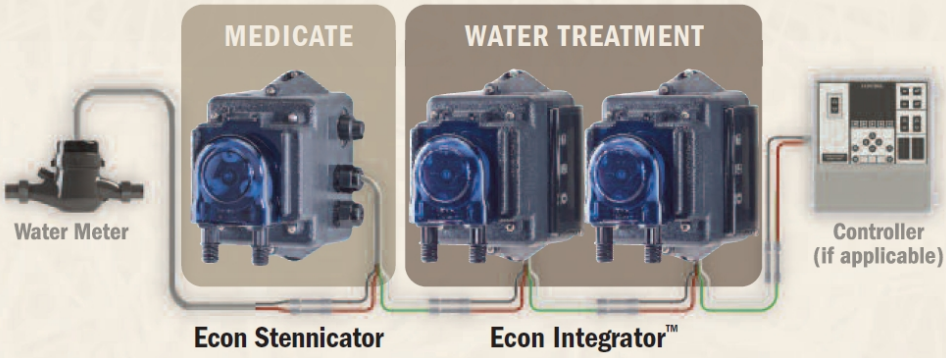

STENNER PARTS AND ACCESSORIES

Stock#: 098315
Water Meter
3/4” Plastic

Stock #: 098310
Pump Control
Module
PCM-10

Stock #: 098320
15 Gallon Natural
Tank

Stock #: 098210
Injection Check Valve
1/4”

Stock #: 098330
Flow Indicator
With Bracket

Stock #: 098327
Weighted Suction Line
Strainer 1/4”

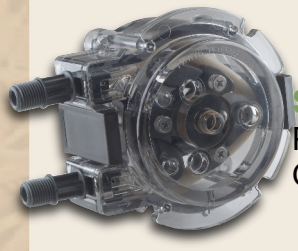

Stock #: 098334
Pump Head New
Quickpro w/#2 Tube

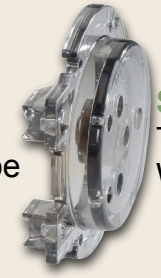

Stock #: 098335
Tube Housing
W/Latches

Stock #: 098336
Tube Housing Cover
W/Bushing

Stock #: 098322 - #1 Tube - 2pk

Stock#: 098328
Ferrule 1/4”
24 Pk

Stock #: 098329
Connecting Nut 1/4”
24 Pk

Stock#: 098323 - #2 Tube - 2pk

Stock #: 098332
Check Valve Body
1/4”

Stock #: 098321 - #3 Tube - 2pk

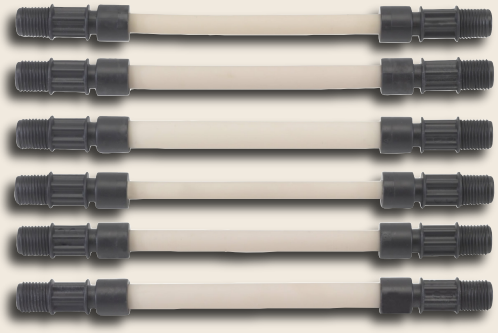

Econ Integrator Pump Tubes

Stock#: 098324 - #5 Tube - 2pk

Stock #: 098331
Santoprene Check
Valve Duckbill
2 Pk

Stock#: 098325 - #7 Tube - 2pk

ETATRON AMERICA

PKX FT/A

eOne Basic

Choose the BEST To Direct Inject Water Treatment Chemicals

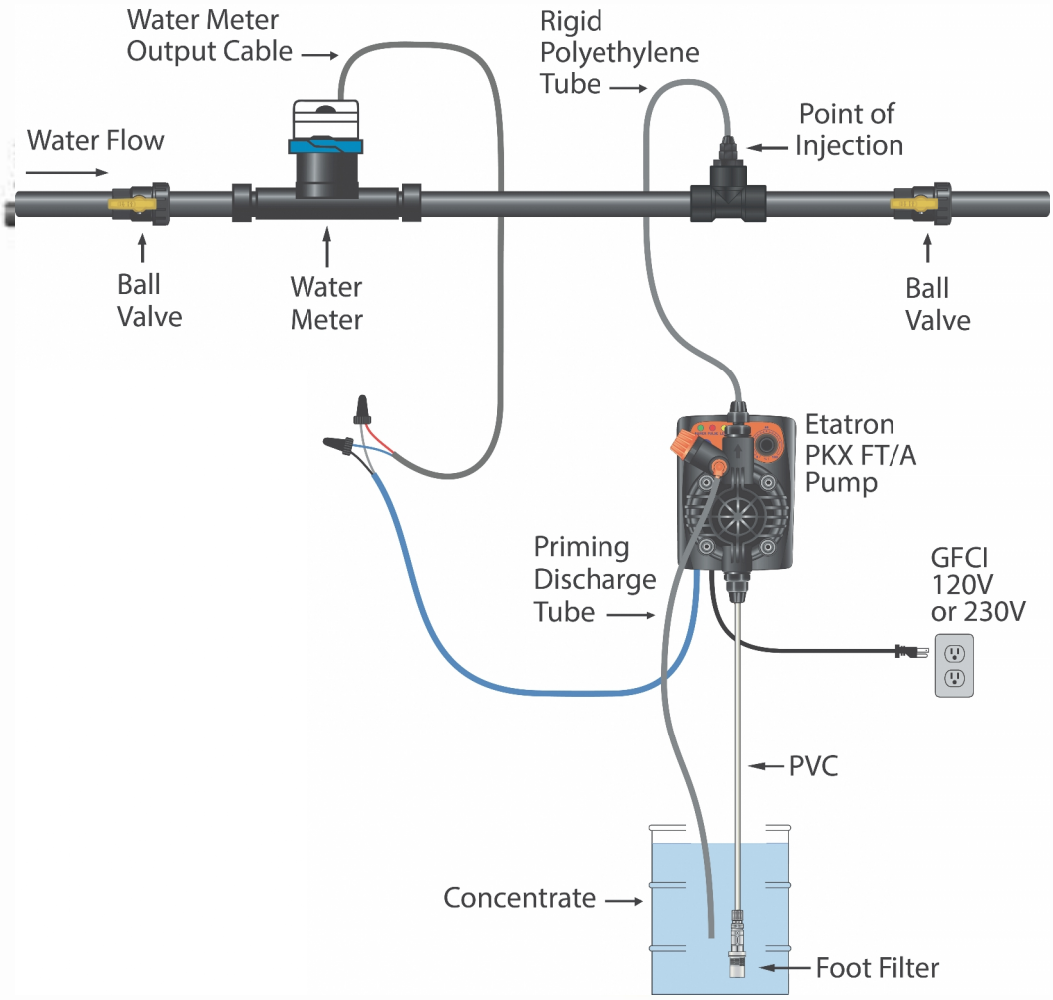

Benefits:

- **Affordable** - priced with the producer in mind
- **Water Quality** - does NOT affect operation of the pump
- **No Seperate Controller** - to buy or maintain
- **Diaphram Pump** - no roller tubes to replace

Perfect for dispensing:

- **Chlorine Dioxide**
- **Chlorine**
- **Peroxide**
- **Perquats**
- **Descalers**

Call 800-451-6628 to find out more or ask your IVESCO/MWI Representative

www.etatronicamerica.com

Nylon Fittings

Barb Tee

Stock #	Size
730145.	1/4”
890209.	3/8”
560120.	1/2”
560125.	3/4”
560632.	1”

Barb Coulping

Stock #	Size
730166.	1/4”
560070.	1/2”
560075.	3/4”
560080.	1”

Barb Elbow

Stock #	Size
560095.	1/2”
560100.	3/4”

Female Thread x Hose Barb

Stock #	Size
890204.	1/2”x 3/8”
890078.	1/2”x 1/2”

Male Pipe Thread x Hose Barb

Stock #	Size
730084.	1/2” x 1/4”
890205.	1/2” x 3/8”
890210.	1/2” x 1/2”

Elbow

Stock #	Size
890206.	1/2” x 3/8”

Tee

Stock #	Size
890207.	1/2” x 3/8” x 3/8”

Brass Hose Bib

Stock #	Size
560735.	1/2”
560738.	3/4”

Boiler Drain

Stock #	Size
560680.	1/2”
560683.	3/4”

Hose, Hose Fittings, and PlasticTubing

Neslon Brass Hose Menders

Stock #	Size
560322.	5/8”
560330.	3/4”

Stock #	Size
560323.	5/8”
560329.	3/4”

Brass Hose Mender

Stock #	Size
560321.	5/8”
560324.	3/4”

Brass Hose Couplings

Stock #	Size
560370.	1/2”
560363.	5/8”
560347.	3/4”

Stock #	Size
560345.	1/2”
560343.	5/8”
560346.	3/4”

Brass Garden Hose Adapter

Stock #	Size
560214.	1/2” MPT x 3/4” MGH
560217.	3/4” MPT x 3/4” MGH

Stock #	Size
560061.	1/2” MPT x 3/4” FGH
560122.	3/4” MPT x 3/4” FGH

Stock #	Size
560205.	1/2” FPT x 3/4” MGH
560371.	3/4” FPT x 3/4” MGH

Stock #	Size
560375.	1/2” FPT x 3/4” FGH

Flexogen Hose with Ends

Stock #	Size
560408	3/4”

Flexogen Hose Bulk

Stock #	Size
560410	5/8”

Utility Hose

Stock #	Size
560409	3/4”

Clear Braided Hose

Stock #	Size
890011	1/4”
890012	3/8”
890042	1/2”

Black Plastic Water Tubing

Stock #	Size
730492	1/4”

Hose Washers

Stock #	Size
560766.	10/Bag

Replacement O-Rings

Stock #	Size
098050	1”
098051	1 1/2”
098052	2”

Z-Flo Regulator
10-25 PSI w/guage

Stock #	Size
710019	3/4”

1-800-328-8842

Schedule 40 PVC

Union

Slip x Slip

Stock #	Size
560782	3/4”
560042	1”
560118	1 1/2”

90° Elbows

Slip x Slip

Stock #	Size
560023	1/2”
560011	3/4”
560038	1”
560056	1 1/2”
560068	2”

90° Elbows

Slip x FIP

Stock #	Size
560781	3/4”
560153	1”

45° Elbows

Slip x Slip

Stock #	Size
560778	3/4”
560039	1”

Tee

Slip x Slip x Slip

Stock #	Size
560326	1/2”
560010	3/4”
560036	1”
560054	1 1/2”
560071	2”

Tee

FIP x FIP x FIP

Stock #	Size
560022	3/4”

Reducing Tee

Slip x Slip x Slip

Stock #	Size
560018	3/4” x 3/4” x 1/2”
560510	1” x 1” x 3/4”
560768	1” x 1” x 1/2”

Reducing Tee

Slip x Slip x FIP

Stock #	Size
560009	3/4” x 3/4” x 1/2”
560150	1” x 1” x 1”

Reducing Tee

Slip x Slip x Barb

Stock #	Size
560096	3/4”

Reducer Bushing

Slip x FIP

Stock #	Size
560017	3/4” x 1/2”
560033	1” x 3/4”
560034	1” x 1/2”

Coupler

Slip x Slip

Stock #	Size
560016	1/2”
560773	3/4”
560043	1”
560108	1 1/2”
560073	2”

Threaded Coupling

Stock #	Size
560066	1/2”
560021	3/4”
560099	1”

Female Adapter

Slip x FIP

Stock #	Size
560008	1/2” x 1/2”
560048	3/4” x 1/2”
560034	1” x 1/2”
560032	1’ x 3/4”
560094	1” x 1”
560292	1 1/2” x 1 1/2”
560293	1 1/2” x 3/4”

Cap

Slip

Stock #	Size
560005	1/2”
560776	3/4”
560151	1”
560062	1 1/2””

Male Adapter

Slip x MIP

Stock #	Size
560328	1/2” x 1/2”
560772	3/4” x 3/4”
560017	3/4” x 1/2”
560031	3/4” x 1”
560127	1” x 3/4”

Cross

Slip x Slip x Slip x Slip

Stock #	Size
560106	3/4”
560040	1”
560092	2”

Reducer Bushing

MIP x FIP

Stock #	Size
560103	1/2” x 1/4”
560026	3/4” x 1/2”
560104	1” x 3/4”

Reducer Bushing

Slip x Slip

Stock #	Size
560065	1/2”
560769	3/4”
560311	3/4” x 1/2”
560294	1 1/2” x 3/4”
560295	1 1/2” x 1”

Plug

Male

Stock #	Size
560107	1/2”
560007	3/4”
560113	1 1/2”

Ball Valve

Slip x Slip

Stock #	Size
560027	1/2”
560012	3/4”
560035	1”
560116	1 1/2””
560069	2”

Ball Valve

FIP x FIP

Stock #	Size
560037	1/2”
560105	3/4”
560063	1”

Check Valve

Slip x Slip

Stock #	Size
560046	1”
560041	1 1/2”

Check Valve

FIP x FIP

Stock #	Size
560041	3/4”

Teflon Tape

Stock # 560759

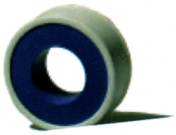

Pipe

Stock #	Size
560013	1/2” x 20’ (Belled End)
560019	3/4” x 20’ (Belled End)
560044	1” x 20’ (Belled End)
560049	1 1/2” x 10’ (Plain End)
560076	2” x 20’ (Belled End)
560001	3” x 20’ (Plain End)

1-800-328-8842

PVC Pipe Straps

Stock #	Size
563820	1/2"
563819	3/4"
563925	1"
563866	1 1/4"
560102	2

Galvanized Pipe Straps

Stock #	Size
560600	1/2"
560603	3/4"
560605	1"
560606	1 1/4"
560112	1 1/2"

Rigid "Clic" Pipe Straps

Stock #	Size
560786	1/2"
560783	3/4"
560784	1"
560785	1 1/4"
560788	1 1/2"
560787	2"

Adj. Clamps SS	Adj. Clamps Galv.
560273 . . . M4S SS	560278 . . . B8H
560274 . . . M4P SS	560280 . . . B10H
560276 . . . M8S SS	560282 . . . B12H
560300 . . . B10HS SS	560256 . . . B16H
560301 . . . B12HS SS	560285 . . . B20H
560254 . . . B16HS SS	560401 . . . B28H
560255 . . . B24HS SS	560288 . . . B32H
560283 . . . B72HS SS	560291 . . . B36H

Stock #

890007

Stock #

890010

Stock #

890360

Stock #

890362

Stock #

730482

Water Meter w/frost protection (ARAD M)
730185

Saddle - High Pressure with Shut-Off
730111

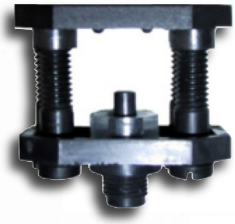

Saddle - Low Pressure with/out Shut-Off
730110

Sprinkler Emitter – 360 Degrees

An adjustable, full circle sprinkler that will cover a 15 foot diameter circle at a height of 9 feet. Emits approximately 12 gallons per/ hour. M5 X 0.8 tap required to install.

Stock # 695126

25' Diameter 360 Degrees Soaker Sprinkler

Soaker sprinkler used in hog barns to presoak before power washing.

Stock# 695150

Sprinkler Emitter – 180 Degrees

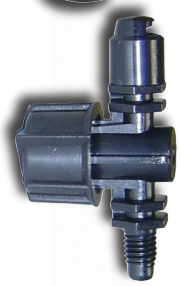

An adjustable, half circle sprinkler that will reach at a height of 9 feet. Emits 10 to 12 gallons per/ hour.

Stock# 695146

Spin Down Filters

- Clear Cover
- Sediment is Visible
- 1", 1 1/2" and 2" sizes have MPT
- Sediment is quickly removed by opening a 1/2" ball valve located at the bottom of the cover.

Stock #	Size
098070	1"
098071	1 1/2"
098072	2"

Replacement Filters

Stock #	Size	Mesh
098100	1"	100
098037	1 1/2"	140
098036	2"	140

Replacement Covers

Stock #	Size
098039	1"
098040	1 1/2"
098038	2"

Stock #

730281

Stock #

890366

METER-MAN

Remote Solenoid Valve
115 VAC
Includes plumbing fittings

Stock #: 695133

ECONO-COOL ECS500
Cont, 12V w/filter & ck

Stock #: 695057

MaxiFlo

FREE FLOW RATES Valve not connected to pipework					
Model No.		6001	6002	6003	6012
U.S. gallons per minute					
Maintained inlet pressure psi	**20**	2.1	6.8	9.8	9.8
	30	2.3	7.4	10.2	10.2
	40	2.5	9.0	10.8	10.8
	50	2.7	9.1	10.8	10.8
	60	3.0	9.5	10.9	10.9
Imperial gallons per minute					
Maintained inlet pressure psi	**20**	1.8	5.7	8.2	8.2
	30	1.9	6.2	8.5	8.5
	40	2.1	7.5	9.0	9.0
	50	2.3	7.6	9.0	9.0
	60	2.5	7.9	9.1	9.1

Parts List

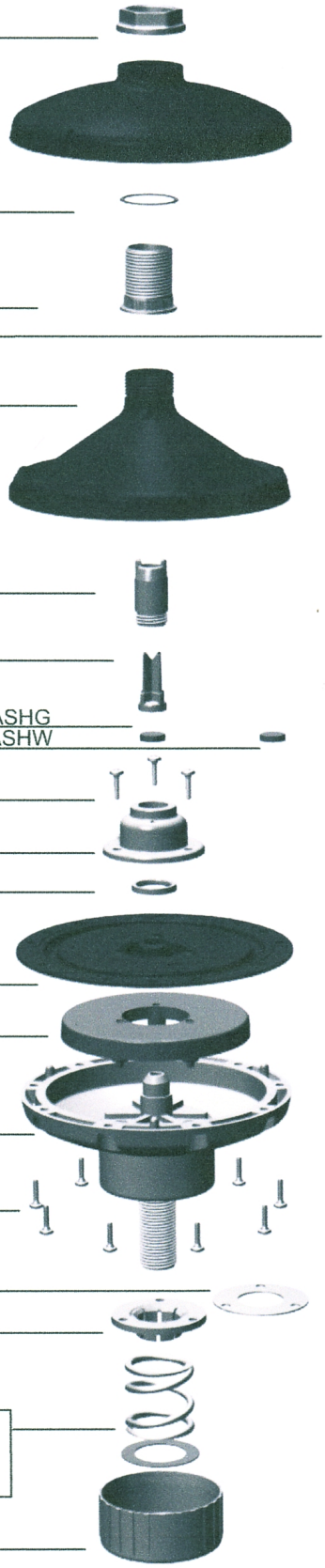

Locking nut #990248

Top shell #911704

Graphite washer #911763

Outlet tube #911879

or

Shell Outlet BK #911757

Jumper Valve Guide #912263

Jumper valve #912280

Jumper washer
Green-6001,6002 #MFWASHG
White-6003,6012 #MFWASHW

Screws SS (3) #911808

Jumper carrier #912301

Retaining ring #911771

Diaphragm 6001 #911700
600/3/12 #911701

Backing plate #911829

Bottom shell (base)* #911801

Body screw (9) #911808

Thrust plate-SS-
6001 only #911747

Thrust plate-plastic #911798
-6002,6003,
6012 only

Spring 6001 #911607
6002 #911623
6003/07 #911958
6012 #911666

Adjustment nut #911836

N.B Diaphragm bottom shell (base) and spring differ from model to model