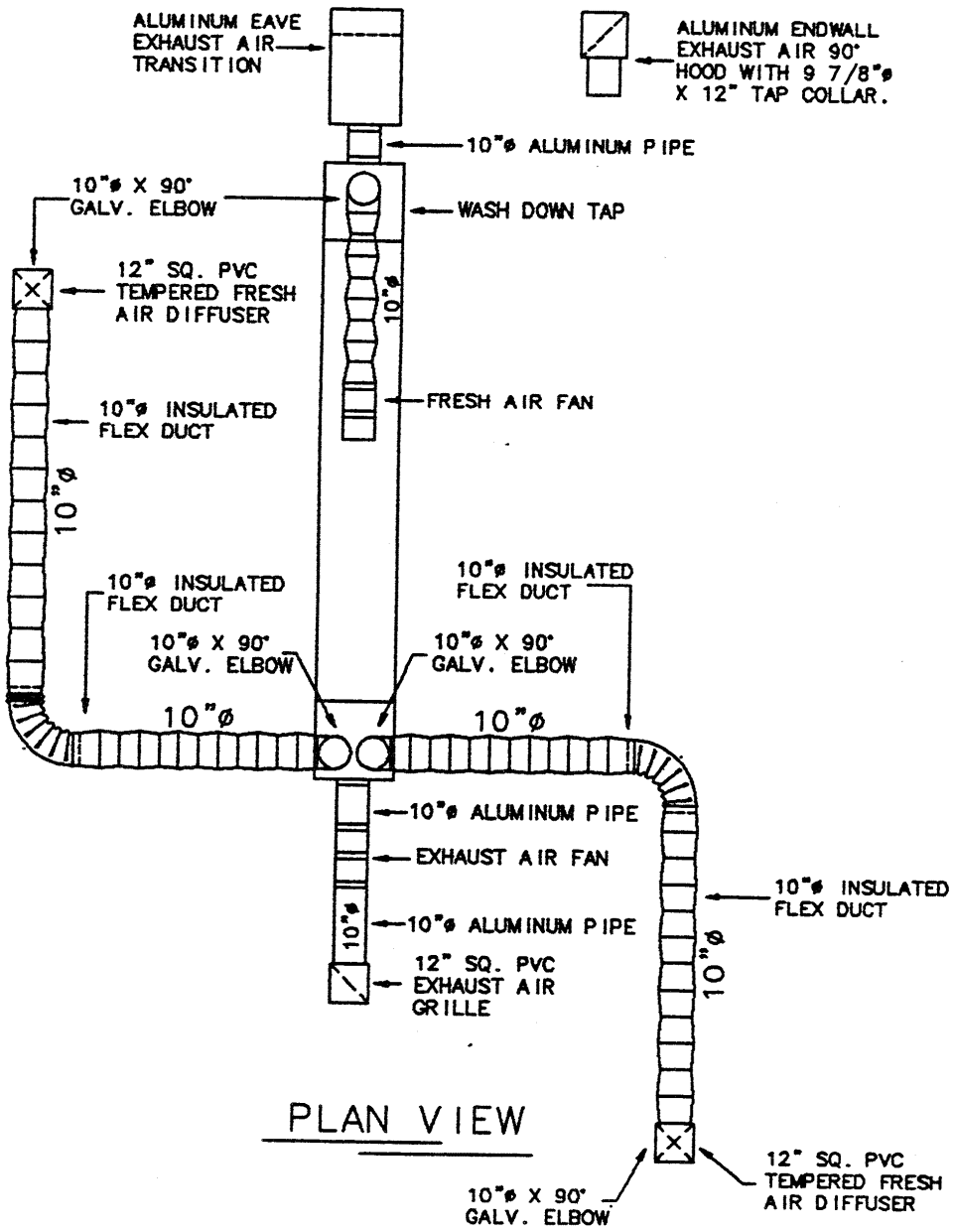

PLAN VIEW

RAYDOT RD16H HEAT RECOVERY VENTILATOR

STANDARD EQUIPMENT

1 – HEAT RECOVERY VENTILATOR
1 – MTC–3C VARIABLE SPEED CONTROL
1 – 10"ø, 230 VOLT, EXHAUST FAN
1 – 10"ø, 230 VOLT, FRESH AIR FAN

OPTIONAL EQUIPMENT

ALUMINUM EAVE EXHAUST AIR TRANSITION FITTING WITH 9 7/8"ø X 2" TAP COLLAR

ALUMINUM ENDWALL EXHAUST AIR 90° HOOD WITH 9 7/8"ø X 12" WALL SLEEVE

OPTIONAL TWO DIFFUSER DUCTWORK AND ACCESSORY PKG.

1 – WASH DOWN SYSTEM
2 – 10"ø X 2' LONG ALUMINUM PIPE SECTIONS
1 – 10"ø X 90° ALUMINUM ELBOW
5 – 10"ø X 90° GALVANIZED ELBOWS
3 – 10"ø X 25' LONG INSULATED FLEX DUCT
1 – 12" SQ. PVC EXHAUST AIR GRILLE
2 – 12" SQ. PVC TEMPERED FRESH AIR DIFFUSERS

UNLESS OTHERWISE SPECIFIED TOLERANCES: FRACTIONS ± 1/32; DECIMALS INCH .X ± .020, .XX ± .010, .XXX ± .005; ANGLES ± 0°30'	DATE: 012192	RAYDOT HEAT RECOVERY VENTILATOR	RAYDOT TOTAL VENTILATION SYSTEMS
	DRAWN BY: LS		
MATERIAL:	ENGR:		
	APPROVED:		
	DLR:	RD16H TWO DIFFUSER	DRAWING NUMBER
	REP:	SCALE: NONE SHEET 1 OF 4	3023-A-91

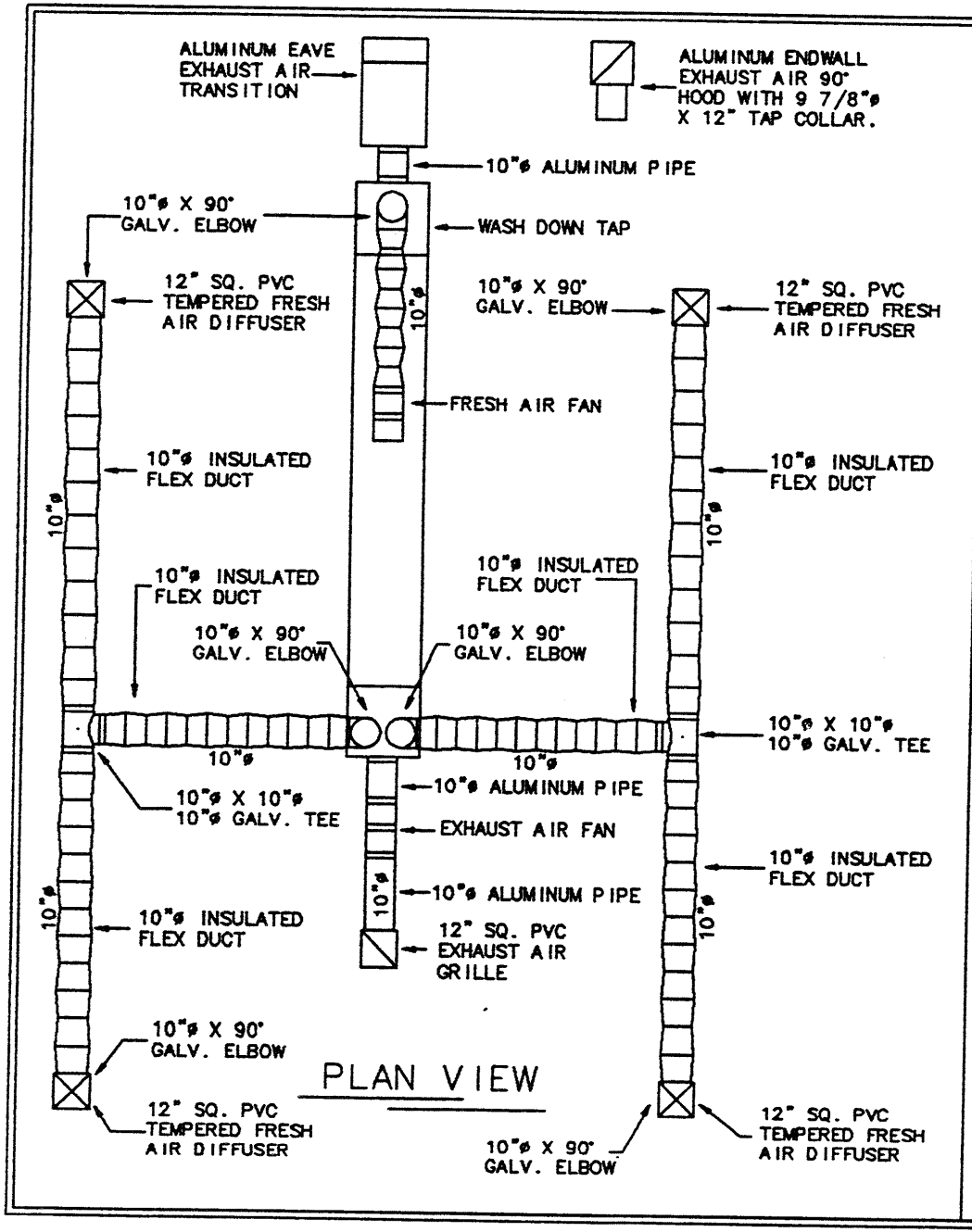

RAYDOT RD16H HEAT RECOVERY VENTILATOR

STANDARD EQUIPMENT

1 – HEAT RECOVERY VENTILATOR
1 – MTC-3C VARIABLE SPEED CONTROL
1 – 10"ø, 230 VOLT, EXHAUST FAN
1 – 10"ø, 230 VOLT, FRESH AIR FAN

OPTIONAL EQUIPMENT

ALUMINUM EAVE EXHAUST AIR TRANSITION FITTING WITH 9 7/8"ø X 2" TAP COLLAR

ALUMINUM ENDWALL EXHAUST AIR 90° HOOD WITH 9 7/8:ø X 12" WALL SLEEVE

OPTIONAL FOUR DIFFUSER DUCTWORK AND ACCESSORY PKG.

1 – WASH DOWN SYSTEM
2 – 10"ø X 2' LONG ALUMINUM PIPE SECTIONS
1 – 10"ø X 90° ALUMINUM ELBOW
7 – 10"ø X 90° GALVANIZED ELBOWS
5 – 10"ø X 25' LONG INSULATED FLEX DUCT
1 – 12" SQ. PVC EXHAUST AIR GRILLE
4 – 12" SQ. PVC TEMPERED FRESH AIR DIFFUSERS
2 – 10"ø X 10"ø X 10"ø GALVANIZED TEES

UNLESS OTHERWISE SPECIFIED TOLERANCES: FRACTIONS ± 1/32; DECIMALS INCH .X ± .020, .XX ± .010, .XXX ± .005; ANGLES ± 0°30'; MATERIAL:	DATE: 012192; DRAWN BY: LS; ENGR:; APPROVED:; DLR:; REP:	RAYDOT HEAT RECOVERY VENTILATOR	RAYDOT TOTAL VENTILATION SYSTEMS
		RD16H FOUR DIFFUSER	DRAWING NUMBER
		SCALE: NONE; SHEET 2 OF 4	3023-B-91

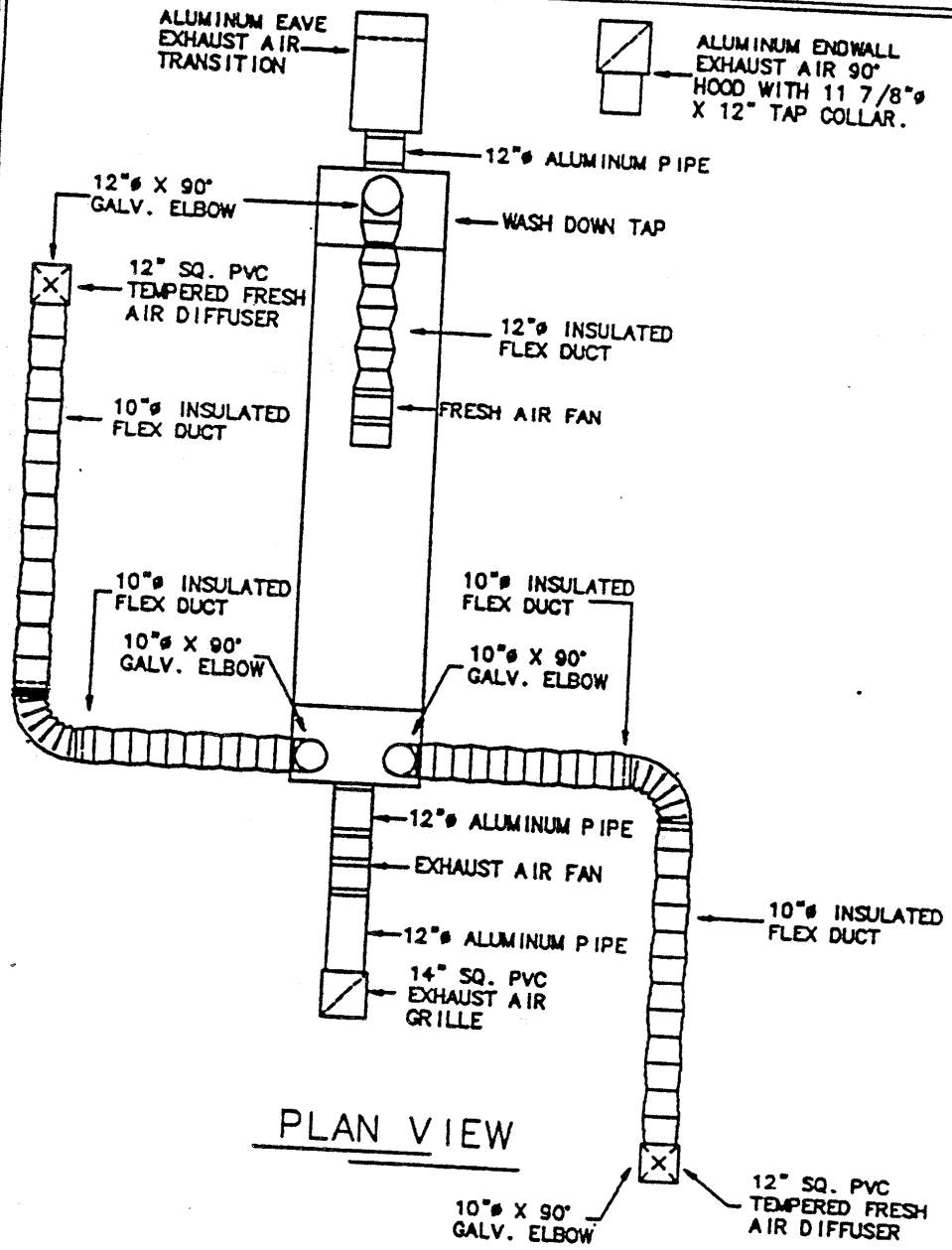

PLAN VIEW

RAYDOT RD18H HEAT RECOVERY VENTILATOR

STANDARD EQUIPMENT

1 – HEAT RECOVERY VENTILATOR
1 – MTC-3C VARIABLE SPEED CONTROL
1 – 12"ø, 230 VOLT, EXHAUST FAN
1 – 12"ø, 230 VOLT, FRESH AIR FAN

OPTIONAL EQUIPMENT

ALUMINUM EAVE EXHAUST AIR TRANSITION FITTING WITH 11 7/8"ø X 2" TAP COLLAR

ALUMINUM ENDWALL EXHAUST AIR 90° HOOD WITH 11 7/8"ø X 12" WALL SLEEVE

OPTIONAL TWO DIFFUSER DUCTWORK AND ACCESSORY PKG.

1 – WASH DOWN SYSTEM
2 – 12"ø X 2' LONG ALUMINUM PIPE SECTIONS
1 – 12"ø X 90° ALUMINUM ELBOW
4 – 10"ø X 90° GALVANIZED ELBOWS
2 – 10"ø X 25' LONG INSULATED FLEX DUCT
1 – 14" SQ. PVC EXHAUST AIR GRILLE
2 – 12" SQ. PVC TEMPERED FRESH AIR DIFFUSERS
1 – 12"ø X 90° GALVANIZED ELBOW
1 – 12"ø X 25' LONG INSULATED FLEX DUCT

UNLESS OTHERWISE SPECIFIED TOLERANCES: FRACTIONS ± 1/32; DECIMALS INCH .X ± .020, .XX ± .010, .XXX ± .005; ANGLES ± 0°30'; MATERIAL:	DATE: 012192; DRAWN BY: LS; ENGR:; APPROVED:; DLR:; REV:	RAYDOT HEAT RECOVERY VENTILATOR; RD18H TWO DIFFUSER; SCALE: NONE; SHEET 3 OF 4	RAYDOT TOTAL VENTILATION SYSTEMS; DRAWING NUMBER 3023-C-91

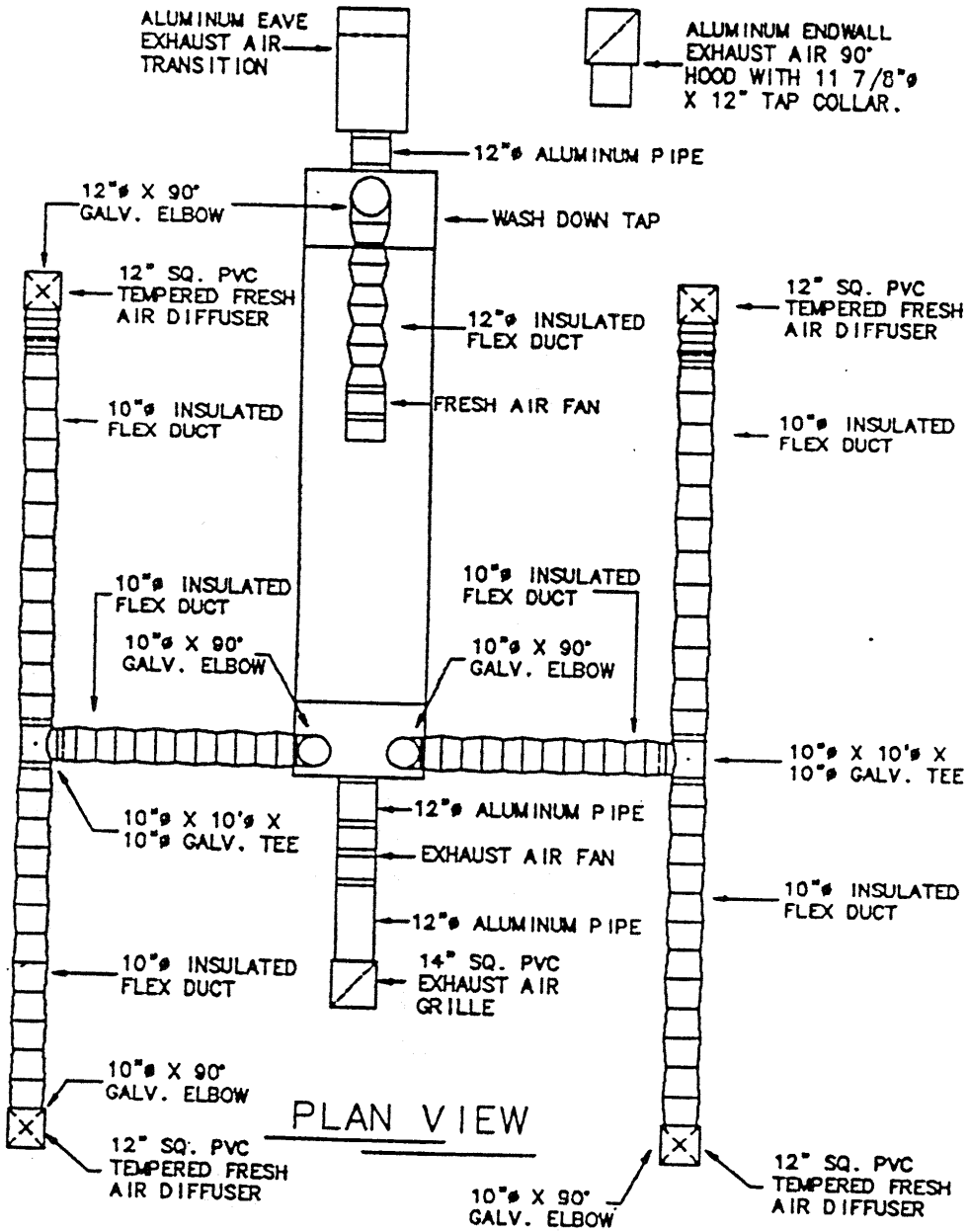

RAYDOT RD18H HEAT RECOVERY VENTILATOR

STANDARD EQUIPMENT

1 – HEAT RECOVERY VENTILATOR
1 – MTC-3C VARIABLE SPEED CONTROL
1 – 12"ø, 230 VOLT, EXHAUST FAN
1 – 12"ø, 230 VOLT, FRESH AIR FAN

OPTIONAL EQUIPMENT

ALUMINUM EAVE EXHAUST AIR TRANSITION FITTING WITH 11 7/8"ø X 2" TAP COLLAR

ALUMINUM ENDWALL EXHAUST AIR 90° HOOD WITH 11 7/8"ø X 12" WALL SLEEVE

OPTIONAL FOUR DIFFUSER DUCTWORK AND ACCESSORY PKG.

1 – WASH DOWN SYSTEM
2 – 12"ø X 2' LONG ALUMINUM PIPE SECTIONS
1 – 12"ø X 90° ALUMINUM ELBOW
6 – 10"ø X 90° GALVANIZED ELBOWS
4 – 10"ø X 25' LONG INSULATED FLEX DUCT
1 – 14" SQ. PVC EXHAUST AIR GRILLE
4 – 12" SQ. PVC TEMPERED FRESH AIR DIFFUSERS
1 – 12"ø X 90° GALVANIZED ELBOW
1 – 12"ø X 25' LONG INSULATED FLEX DUCT
4 – 10"ø X 10"ø X 10"ø GALVANIZED TEES

UNLESS OTHERWISE SPECIFIED TOLERANCES: FRACTIONS ± 1/32 DECIMALS INCH .X ± .020 .XX ± .010 .XXX ± .005 ANGLES ± 0°30'	DATE: 012192	RAYDOT HEAT RECOVERY VENTILATOR	RAYDOT TOTAL VENTILATION SYSTEMS
	DRAWN BY: LS		
	ENGR:		
	APPROVED:		
	DLR:	RD18H FOUR DIFFUSER	DRAWING NUMBER: 3023-D-91
MATERIAL:	REP:	SCALE: NONE	SHEET 4 OF 4

RAYDOT PACKAGE UNIT PRICE LIST

RD-16-H	24 5/8" X 12 5/8" X 16'	PKG UNIT*	$2078.00
RD-18-H	42" X 12 5/8" X 18'	PKG UNIT*	2673.00

***INCLUDES HRV, 2 - Inline Tube Fans (10" dia. RD-16-H; 12" dia. RD-18-H), and MTC-3C Control.**

ACCESSORIES:

Eave Exhaust Transition Box w/10"d.or 12" Tap collar		$190.00
90 deg. Exhaust Elbow w/10"d.Sleeve (Endwall Exhaust)		98.00
90 deg. Exhaust Elbow w/12"d.Sleeve (Endwall Exhaust)		118.00
12" X 12" Air diffuser w/10"d. neck adaptor		35.53
14" X 14" Air diffuser w/12"d. neck adaptor		38.68
Wash Down Pipes for RD-16-H		125.00
Wash Down Pipes for RD-18-H		163.00
Balancing Damper 10"d.		4.50
90 deg. X 10"d. Aluminum Elbow	.032	27.58
90 deg. X 12"d. Aluminum Elbow	.032	32.90
90 deg. X 10"d. Galvanized Elbow	24GA	19.60
10"d. X 5' Galvanized pipe	24GA	28.00
10"d. X 4' Aluminum pipe	.024	28.00
12"d. X 4' Aluminum pipe	.024	32.40
10"d. X 10"d. X 10"d. Galvanized Tee	24GA.	31.34
10"d. X 25' Insulated Flex		58.50
12"d. X 25' Insulated Flex		80.50
8" d. X 25' Insulated Flex		54.60
10"d. X 8"d. Reducer - Increaser Galvanized		15.00
10"d. X 12"d. Reducer - Increaser Aluminum		53.62

RD16H TWO DIFFUSER STANDARD DUCTWORK AND ACCESSORIES

1 – WASH DOWN SYSTEM
2 – 10"ø X 2' ALUMINUM PIPE SECTIONS
1 – 10"ø X 90° ALUMINUM ELBOW
5 – 10"ø X 90° GALVANIZED ELBOWS
3 – 10"ø X 25' INSULATED FLEX DUCT
1 – 12" X 12" PVC EXHAUST INTAKE, WITH 10"ø NECK ADAPTER (NO INSERTS)
2 – 12" X 12" PVC MULTI-DIRECTIONAL DIFFUSERS, WITH 10"ø NECK ADAPTER AND DAMPER

$569.67

RD16H FOUR DIFFUSER STANDARD DUCTWORK AND ACCESSORIES

1 – WASH DOWN SYSTEM
2 – 10"ø X 2' ALUMINUM PIPE SECTIONS
1 – 10"ø X 90° ALUMINUM ELBOW
7 – 10"ø X 90° GALVANIZED ELBOWS
5 – 10"ø X 25' INSULATED FLEX DUCT
1 – 12" X 12" PVC EXHAUST INTAKE, WITH 10"ø NECK ADAPTER (NO INSERTS)
4 – 12" X 12" PVC MULTI-DIRECTIONAL DIFFUSERS, WITH 10"ø NECK ADAPTER AND DAMPER
2 – 10"ø X 10"ø X 10"ø GALVANIZED TEES

$868.61

OPTIONS:

ALUMINUM EAVE TRANSITION W/10"ø TAP COLLAR, $190.00
ALUMINUM ENDWALL EXHAUST HOOD W/10"ø SLEEVE, $98.00

RD18H TWO DIFFUSER STANDARD DUCTWORK AND ACCESSORIES

1 – WASH DOWN SYSTEM
2 – 12"ø X 2' ALUMINUM PIPE SECTIONS
1 – 12"ø X 90° ALUMINUM ELBOW
1 – 12"ø X 90° GALVANIZED ELBOW
4 – 10"ø X 90° GALVANIZED ELBOWS
2 – 10"ø X 25' INSULATED FLEX DUCT
1 – 12"ø X 25' INSULATED FLEX DUCT
1 – 14" X 14" PVC EXHAUST INTAKE, WITH 12"ø NECK ADAPTER (NO INSERTS)
2 – 12" X 12" PVC MULTI-DIRECTIONAL DIFFUSERS, WITH 10"ø NECK ADAPTER AND DAMPER

$648.94

RD18H FOUR DIFFUSER STANDARD DUCTWORK AND ACCESSORIES

1 – WASH DOWN SYSTEM
2 – 12"ø X 2' ALUMINUM PIPE SECTIONS
1 – 12"ø X 90° ALUMINUM ELBOW
1 – 12"ø X 90° GALVANIZED ELBOW
6 – 10"ø X 90° GALVANIZED ELBOWS
4 – 10"ø X 25' INSULATED FLEX DUCT
1 – 12"ø X 25' INSULATED FLEX DUCT
2 – 10"ø X 10"ø X 10"ø GALVANIZED TEES
1 – 14" X 14" PVC EXHAUST INTAKE, WITH 12"ø NECK ADAPTER (NO INSERTS)
4 – 12" X 12" PVC MULTI-DIRECTIONAL DIFFUSERS, WITH 10"ø NECK ADAPTER AND DAMPER

947.88

OPTIONS:

ALUMINUM EAVE TRANSITION W/12"ø TAP COLLAR, $190.00
ALUMINUM ENDWALL EXHAUST HOOD W/12"ø SLEEVE$118.00

MTC-3C MODULATING TEMPERATURE CONTROL

GENERAL INFORMATION

- Non-metallic, non-corrosive, water resistant enclosure
- 6 degrees Fahrenheit Temperature modulating band
- Transient protected
- Minimum air flow adjustment up to 95%
- Automatic or manual settings
- C.S.A. file number LR61791
- Overload protected by fuse

CAUTION: FOR CONTROL OF SHADED POLE, PERMANENT SPLIT CAPACITOR, OR UNIVERSAL MOTORS ONLY.

ELECTRICAL RATINGS

Voltage: 120/240 VAC
Freq: 50-60HZ

Amps: 10 FLA rating (Full Load Amps)
Phase: 1 (Single Phase)

OPERATION

The MTC-3C can be used in two modes; automatic or manual control:

To set up the automatic control mode:

a) Turn the TEMP SET knob completely clockwise.
b) Turn the IDLE SET knob to the minimum speed desired.
c) Turn the TEMP SET knob to the desired temperature.

To set up for manual control mode:

a) Turn the TEMP SET knob completely clockwise.
b) Turn the IDLE SET knob to desired idle speed.

KNOB INSTALLATION AND CALIBRATION

- Turn on power to MTC-3C.
- Turn the TEMP SET shaft fully clockwise.
- Turn the IDLE SET shaft fully counter-clockwise. Install the knob with the pointer centered on the "lo" position.
- Slowly turn the TEMP SET shaft counter-clockwise until fan speed begins to increase. Install the knob so the pointer lines up with the actual barn temperature. The MTC-3C is now calibrated.

IMPORTANT

Evidence of moisture damage will void warranty.

Use liquid tight connectors at power entry points. Preferred entry point is the bottom portion of the control box.

INSTALLATION INSTRUCTIONS

Warning: Disconnect power source before servicing control or fan.

Mount the control so it is easily monitored and the sensor is out of reach of animals.

Grounding: A grounding stud has been provided at the cable entrance to the control.

WARNING: To avoid any damage, check wiring before turning power on.

120 Vac: Connect the White wire marked #5 to the neutral side of the line and the common lead going out to the motor. Connect the Blue wire marked #3 to the other side of the motor. Connect the Black wire marked #6 to the line side of the power line coming into the control. Insure the White wire marked #4 has a Marrette or similar connector installed to insulate any bare wire.

240 Vac: Connect the White wire marked #4 to one side of the line and the common lead going out to the motor. Connect the Blue wire marked #3 to the other wire out of the motor. Connect the Black wire marked #6 to the other line side. Insure the White wire marked #5 has a Marrette or similar connector installed to insulate any bare wire.

Temperature Probe: The MTC-3C is shipped with the Liquid tight strain relief not tightened. After the MTC-3C is installed, insure the probe is connected to the fast-on tabs. Gently pull on the probe to extend it out of the enclosure and tighten the compression nut on the strain relief.

Remote Temperature Sensing: The temperature probe may be extended to 500 feet. Longer probes are available and may be ordered through your dealer. We do not recommend running the probe inside conduit or parallel to other power lines. When installing Temperature probes in parallel we do not recommend running them closer than 12"/30cm.

CAUTION

Although our quality control procedures are very strict and every control goes through several test procedures, the possibility still exists something may fail beyond our control.

After initial installation, check the control after four hours of operation to ensure it is operating properly.

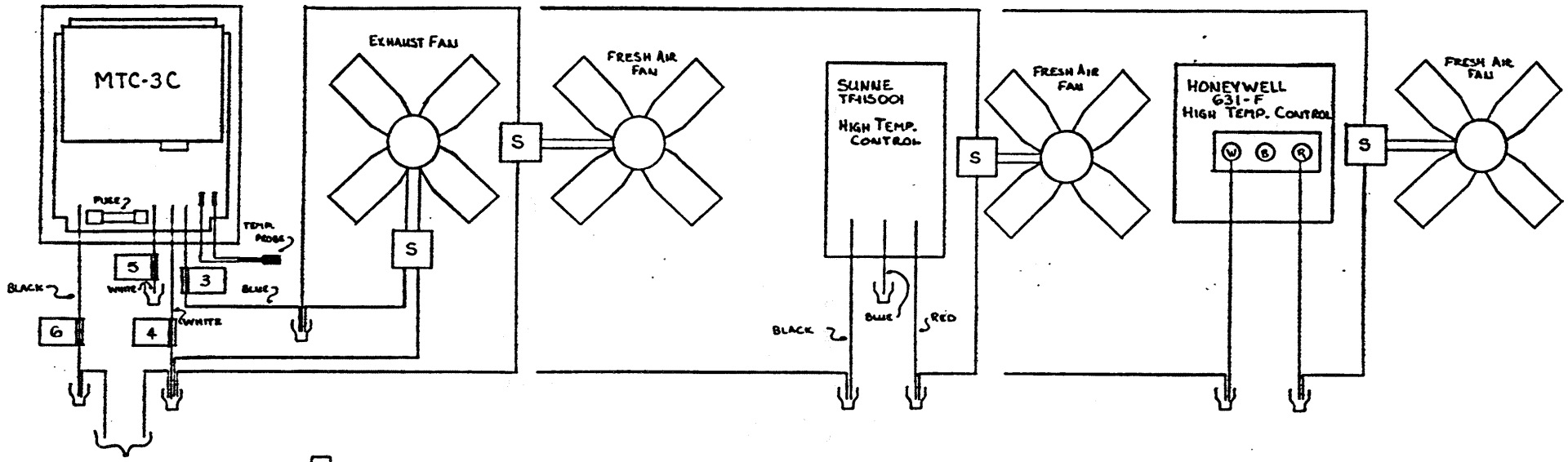

INSULATE WITH APPROPRIATE SIZED TWIST ON CONNECTORS

S — AN APPROPRIATE SIZED FUSED SWITCH SHOULD BE INSTALLED BETWEEN CONTROL AND MOTOR

NOTE: FOR 120 VAC SYSTEMS, WIRE TO LEAD #5 AND INSULATE LEAD #4

HEAT RECOVERY VENTILATOR CONTROL SYSTEM

NO.	REVISION	REV DATES	REV BY	AUTH. BY	ORIG. DIM.	REV. DIM.					
							SALES	DRAWN BY LS	DATE 10/12/90	RAYDOT HRV CONTROLLER	RAYDOT
							MATERIAL	ENGINEER			
							TREATMENT	CHECKER			2.0-1
							FINISH	APPROVAL		SCALE / SHEET OF	DRAWING NO.

There should be a backup method of ventilation and/or an alarm system in place in case the fan motor or the MTC-3C fail to operate properly.

TROUBLE SHOOTING GUIDE

WARNING: Disconnect power source before servicing control or fan.

SYMPTOM: FAN MOTOR WON'T RUN:

- Make sure the fan motor's thermal cut out is reset.
- Check wiring for accuracy.
- Ensure power is available to control with a test light or voltmeter.
- Check fuse by substituting with another one. If fuse blows immediately, a problem exists with the wiring or the fan motor. If the fuse takes longer (minutes, days or weeks) to blow, the load is exceeding the current rating of the control.
- Return unit for service.

SYMPTOM: FAN MOTOR GROWLS

- To ensure the motor is working, wire motor directly to the power source lines by: disconnecting line from #6 (black), disconnect the motor from #3 (blue) and connect the line directly to the motor.
- Use a short probe (stock probe length) on the MTC-3C unit to ensure excessive noise in not being induced onto the probe.
- Return unit for service.

SYMPTOM: FAN MOTOR SPEED CANNOT BE CONTROLLED BY THE TEMPERATURE SET KNOB.

- If the motor runs at idle or full speed regardless of what the Temperature Set knob is set at, replace the temperature Probe (order part #MT-P3).

If this guide fails to resolve the problem, consult your dealer.

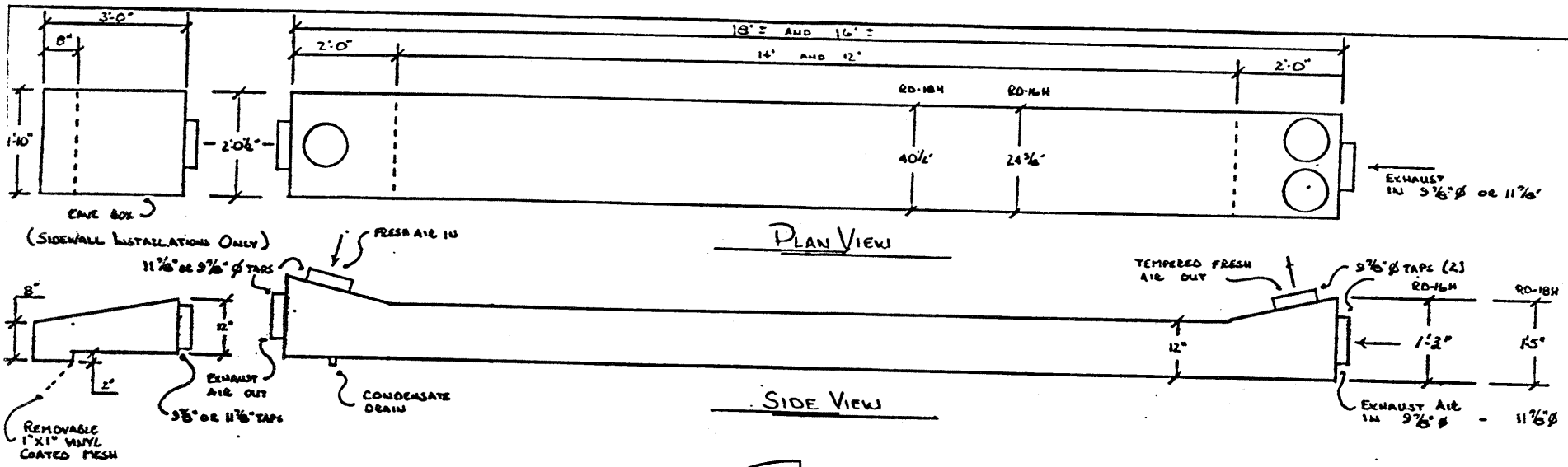

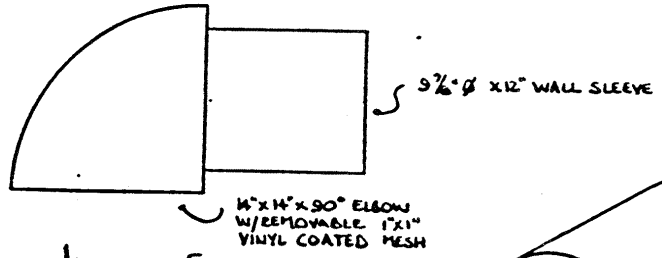

ALUMINUM EXHAUST ELBOW

(FOR ENDWALL INSTALLATIONS)

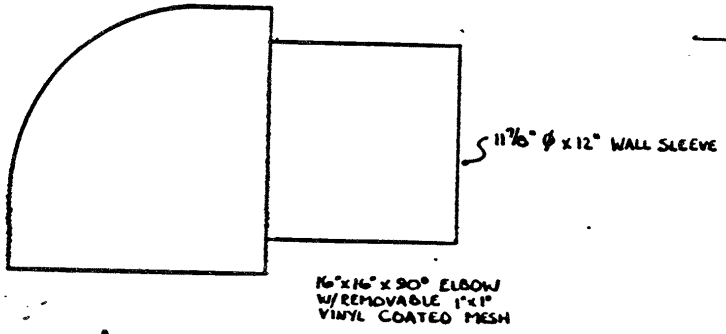

ALUMINUM EXHAUST ELBOW

(FOR ENDWALL INSTALLATIONS)

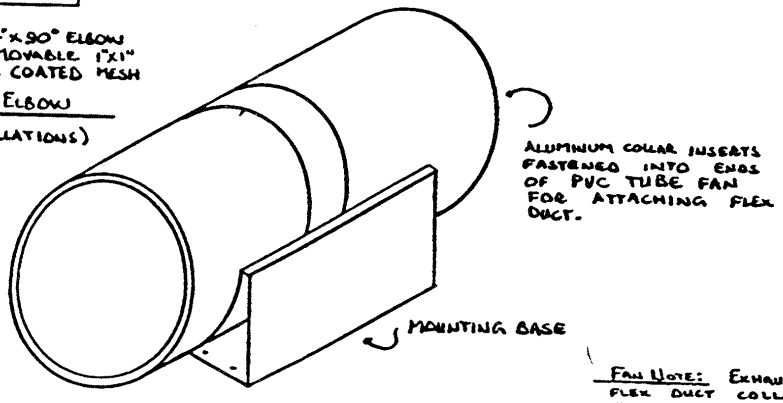

10" OR 12" Ø PVC IN LINE TUBE AXIAL FAN

FAN NOTE: EXHAUST FAN TO HAVE A FLEX DUCT COLLAR INSTALLED IN EACH END. NO FAN GUARD NEEDED.

FRESH AIR FAN TO HAVE A FLEX DUCT COLLAR INSTALLED ON THE DISCHARGE END AND A FAN GUARD INSTALLED IN INTAKE END.

NO.	REVISION	REV. DATES	REV. BY	AUTH. BY	ORIG. DIM.	REV. DIM.

SALES	DRAWN BY B	DATE 10/8/90	RAYDOT HRV SPECIFICATIONS
MATERIAL	ENGINEER		
TREATMENT	CHECKER		
FINISH	APPROVAL		SCALE / SHEET OF

RAYDOT

2.C-S

DRAWING NO.

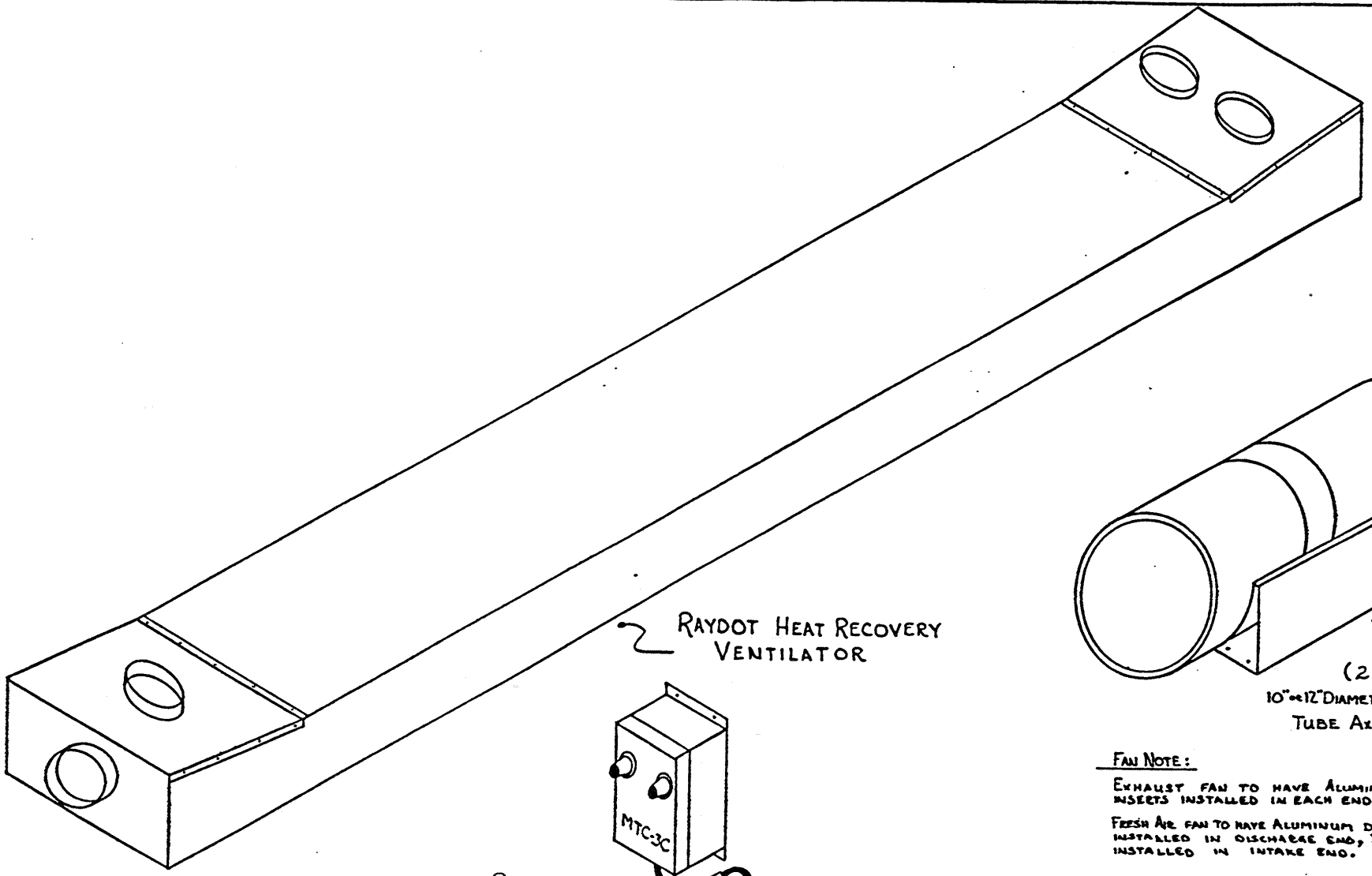

FAN NOTE:

EXHAUST FAN TO HAVE ALUMINUM DUCT STARTER INSERTS INSTALLED IN EACH END. NO FAN GUARD NEEDED.

FRESH AIR FAN TO HAVE ALUMINUM DUCT STARTER INSERT INSTALLED IN DISCHARGE END, FAN GUARD TO BE INSTALLED IN INTAKE END.

NO.	REVISION	REV DATES	REV BY	AUTH. BY	ORIG DIM.	REV. DIM.

SALES	DRAWN BY LS	DATE 101890	RAYDOT PACKAGE HRV
MATERIAL	ENGINEER		
TREATMENT	CHECKER		
FINISH	APPROVAL		SCALE / SHEET OF

RAYDOT

2.C

DRAWING NO

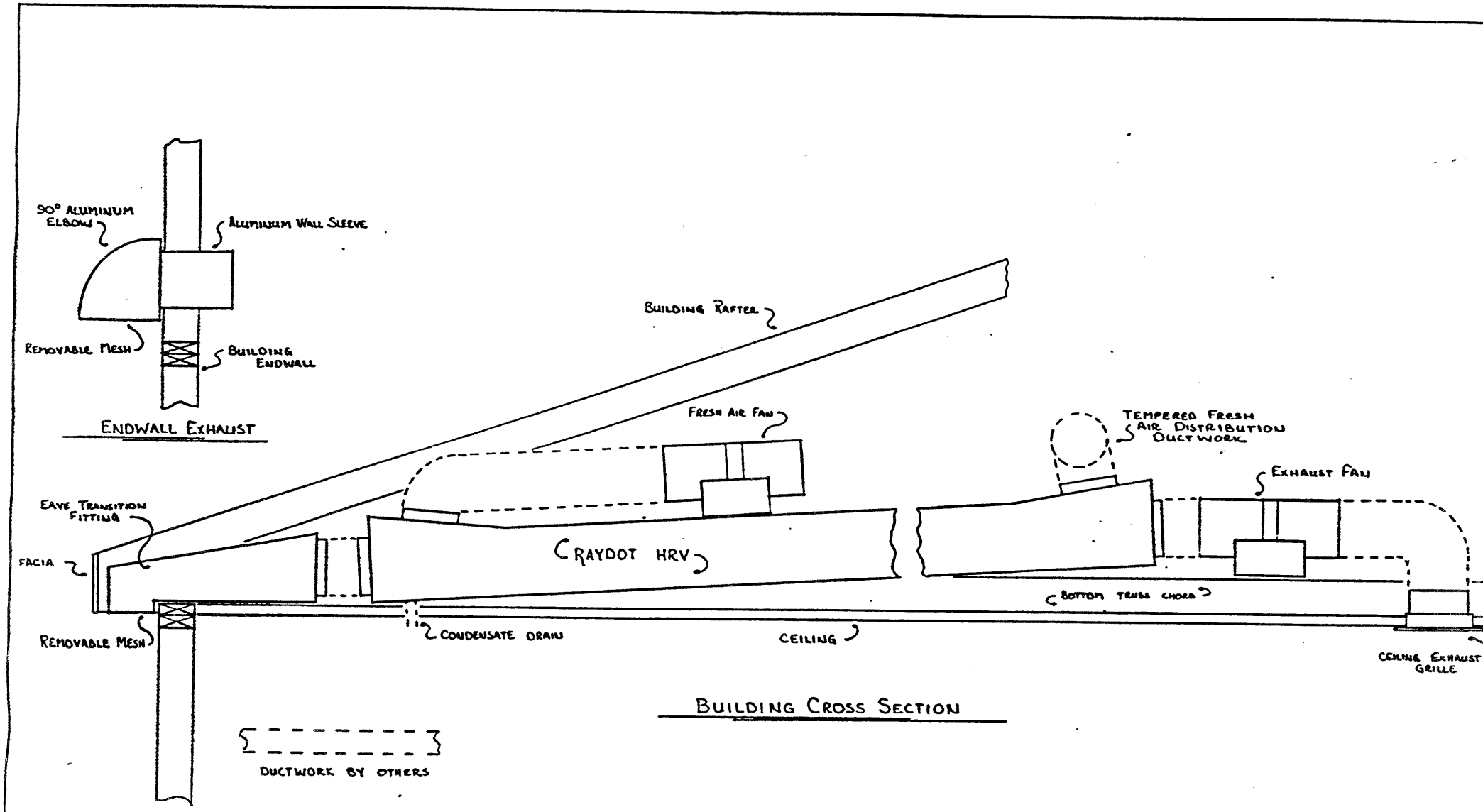

NO.	REVISION	REV DATES	REV BY	AUTH. BY	ORIG DIM.	REV. DIM.

SALES	DRAWN BY LS	DATE 101090	RAYDOT HRV INSTALLATION SECTION VIEW
MATERIAL	ENGINEER		
TREATMENT	CHECKER		
FINISH	APPROVAL		SCALE / SHEET OF

RAYDOT

2.C-6
DRAWING NO.

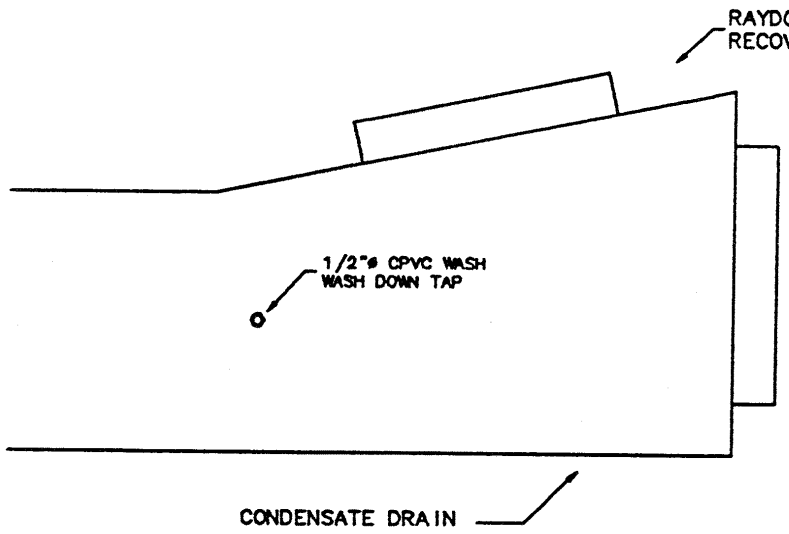

SIDE VIEW

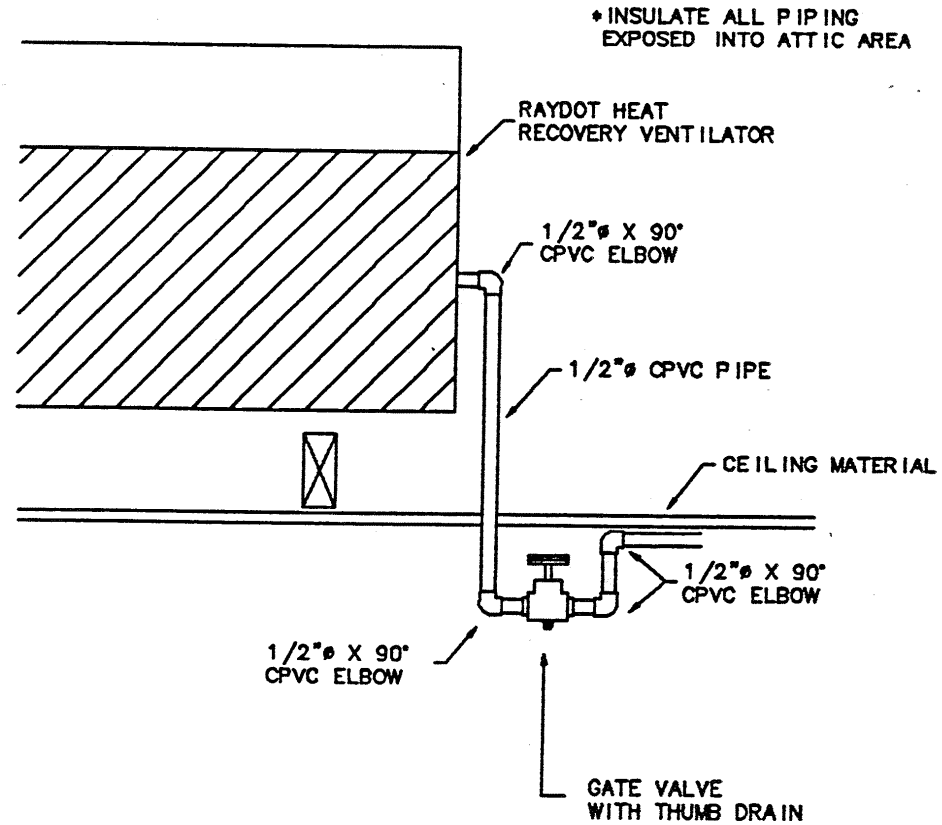

SECTION VIEW

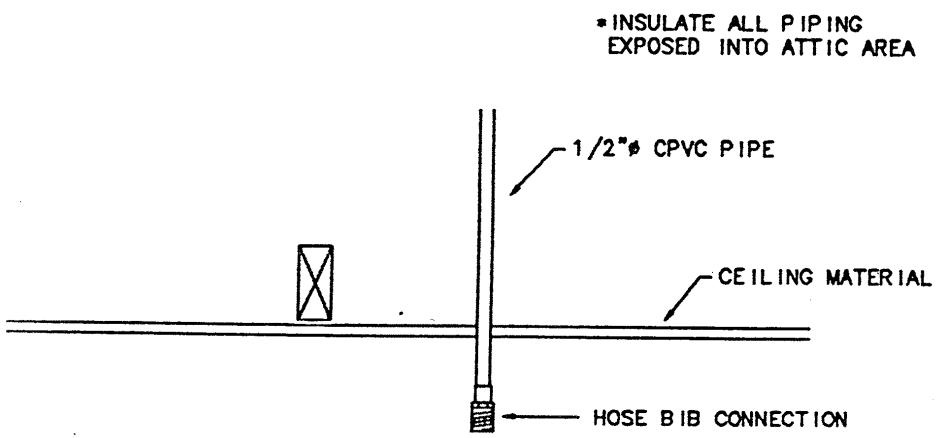

SECTION VIEW

UNLESS OTHERWISE SPECIFIED TOLERANCES: FRACTIONS ± 1/32; DECIMALS INCH .X ± .020, .XX ± .010, .XXX ± .005; ANGLES ± 0°30'	DATE: 031392	WASH DOWN CONNECTION DETAIL	RAYDOT TOTAL VENTILATION SYSTEMS
	DRAWN BY: LS		
	ENGR:		
	APPROVED:		
	DLR:		DRAWING NUMBER
MATERIAL:	REP:	SCALE: NONE	SHEET 1 OF 1 — 2018-A-92

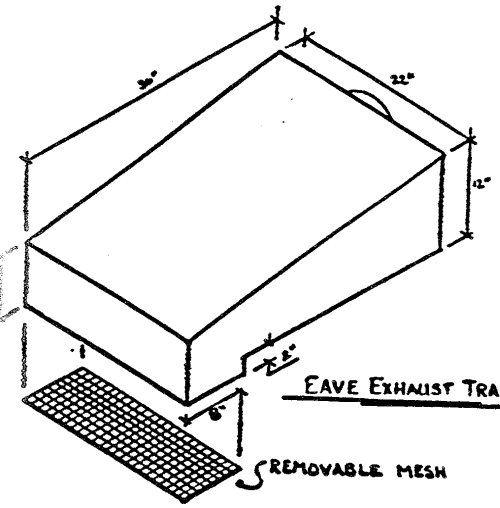

EAVE EXHAUST TRANSITION

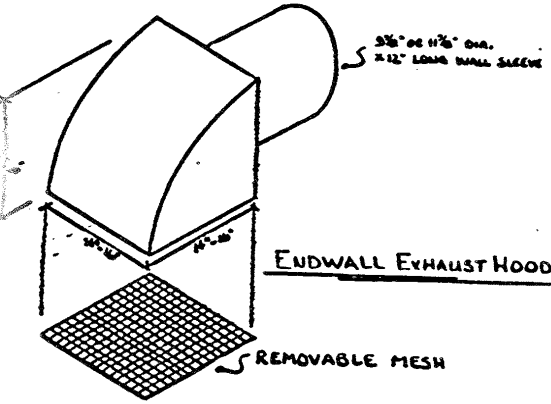

ENDWALL EXHAUST HOOD

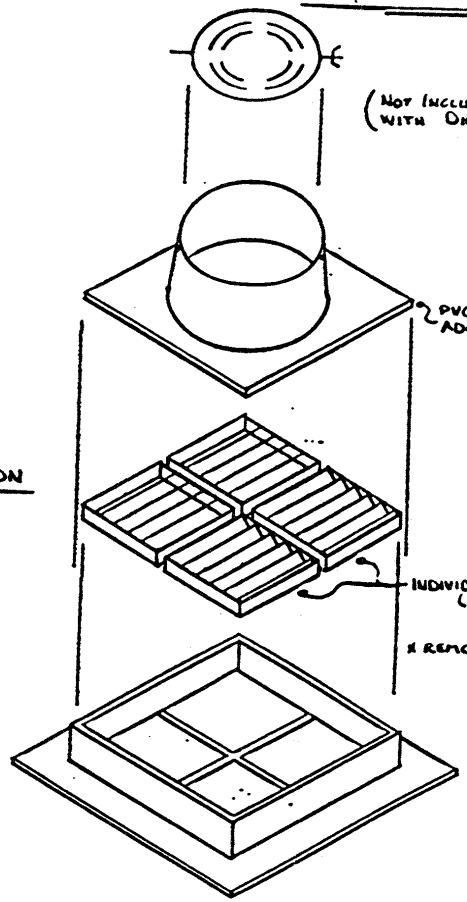

GALV. BALANCING DAMPER

(NOT INCLUDED WITH DIFFUSER)

PVC CEILING DIFFUSER

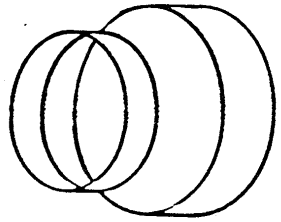

REDUCER/INCREASER

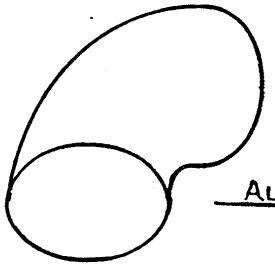

ALUMINUM 90° ELBOW

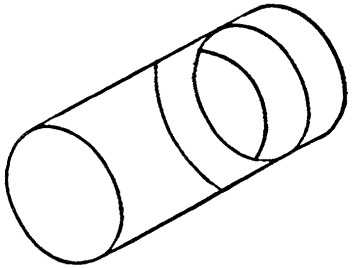

GALV. TEE 10x10x10

REVISION	REV DATES	REV BY	AUTH. BY	ORIG. DIM.	REV. DIM.	SALES	DRAWN BY RS	DATE 10/1/90	RAYDOT HRV ACCESSORIES	RAYDOT
						MATERIAL	ENGINEER			
						TREATMENT	CHECKER			
						FINISH	APPROVAL		SCALE / SHEET OF	2.C-7 DRAWING NO

INSTALLATION GUIDE

RAYDOT package unit Heat Recovery Ventilators are designed for attic installations. The exhaust can either be through the endwall or out the eave overhang. The fresh air fan is designed to mount on top of the HRV and can be "Hard" piped into the fresh air intake tap.

For eave overhang exhaust systems a transition can be ordered to fit the roof line and extend out into the overhang. The HRV can be "Hard Piped" into this transition fitting.

For endwall exhaust systems a 90 degree elbow with a round wall sleeve can be ordered. This fitting also can be "Hard Piped" to the HRV.

The exhaust fan is designed to be installed "In Line" between the ceiling exhaust grille and the HRV, and should be "Hard Piped".

Distribution ductwork should extend from the tempered fresh air taps to the ceiling diffusers. Try to avoid unnecessary tight bends in this ductwork if flex duct is used.

All ceiling diffusers should be accompanied by a "Hard" 90 degree elbow to assist in proper air flow. Ceiling diffusers should also be ordered with balancing dampers.

A 1 1/2" condensate drain is furnished on the unit and should be plumbed into the room and to the waste area. Slope HRV approximately 1/8" per foot to assist condensate drainage.

All exposed un-insulated ductwork should be field wrapped with faced insulation and all seams taped.

polyaire™

range of MULTI DIRECTIONAL OUTLETS

✳ The neck adaptor should be attached to the multi directional outlet, before installation and installed, in the following sequence and manner.

1

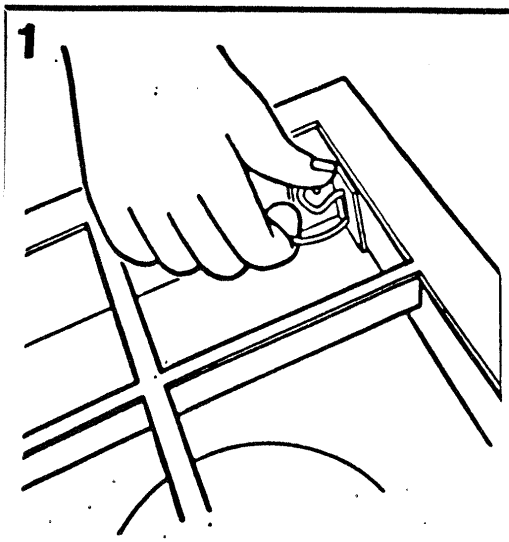

›in the neck adaptor onto the ›utlet ensuring the legs fit inside the neck of the outlet and that the slots align with each other.
Place the clip into the slot as shown, by squeezing the hook end of the clip with the thumb. Do not attempt to push the clip right through at this stage, but just insert far enough to retain the clip in the slot, thus locking both components together.

2

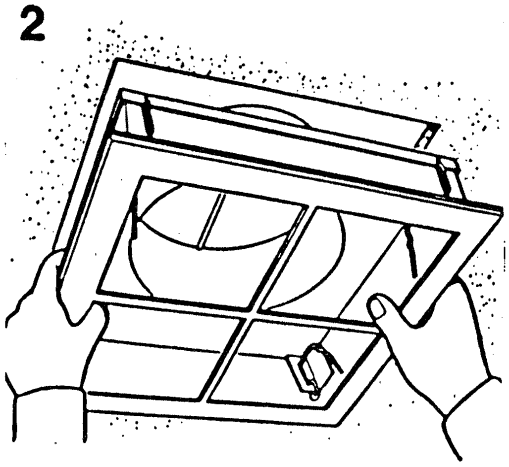

Cut the appropriate size hole in the ceiling to receive outlet assembly allowing for the clips to pass through the hole.

MOUNTING METHOD FOR M.D.O. & NECK ADAPTOR

3

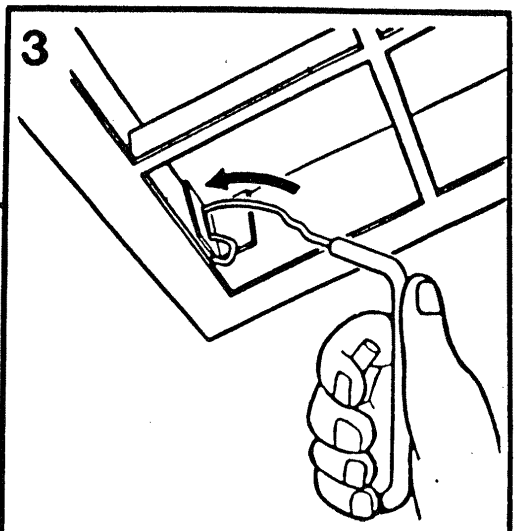

Hold the outlet - neck adaptor firmly into position with one hand and connect the hole in the insert tool over the tail end of the clip as shown.
Press the clips into the fixed position, by using a curved forward motion, as shown by arrow direction. A slight downward pressure should be applied to the clip at the same time to engage the notch in the clip into the top of the slot. Check that the hook end of the clip locks into the hole provided. Sufficient pressure will have to be applied with the insert tool to give it the desired tension.
Normally the 1st notch in the clip is sufficient for 13mm ceilings and the 2nd notch for 10mm ceilings.

4

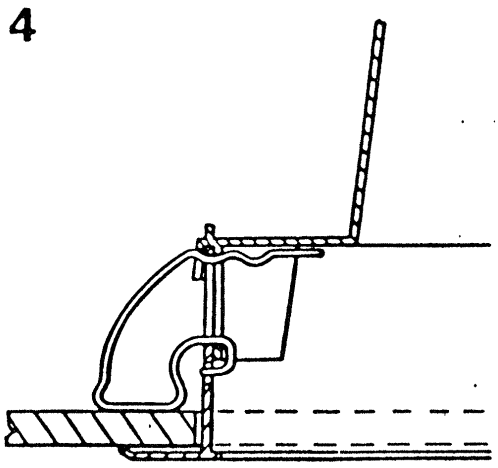

This shows a cut away section of the finished installation.

5

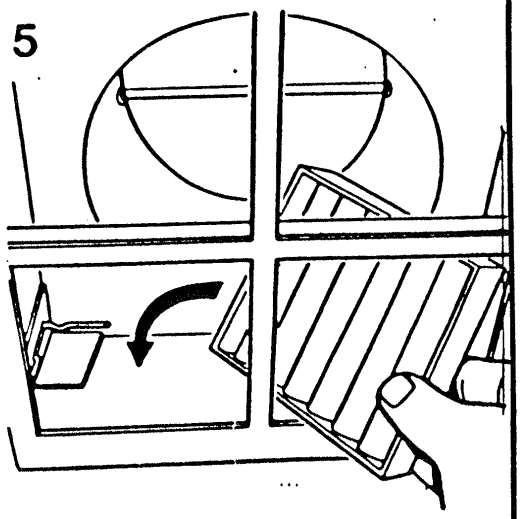

Replace the louvres into the desired position by inserting the louvre through the frame diagonally as shown.

6

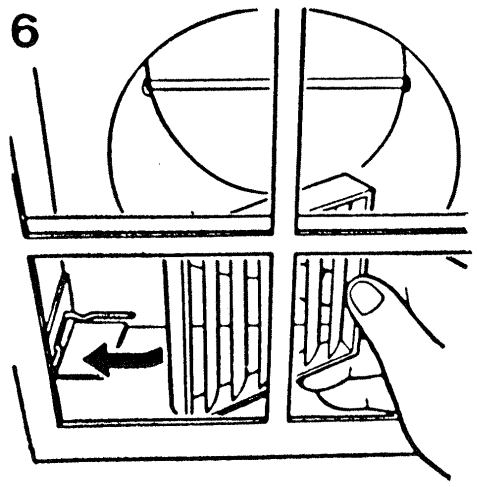

Finally slide the louvre into position by entering it into the cross bar end first and in the direction of arrow. This ensures that it does not interfere with the leg on the neck adaptor.

PERFORMANCE SPECIFICATIONS

polyaire™ range of MULTI DIRECTIONAL OUTLETS

20" SQUARE LOUVRE-FACE CEILING DIFFUSER																
Flow CFM	Static Pressure "H²O	SOUND POWER LEVELS (dB re 1 pW) Octave Band Centre Frequency (Hz) 125	250	500	1000	2000	4000	dB(A)	1-Way Throw	1-Way Angle	2-Way Throw	2-Way Angle	4-Way Throw	4-Way Angle
200	0.00								3ft	160°	3ft	150°	2ft	150°
300	0.00								6	160	5	150	4	150
400	0.00								10	160	8	150	6	150
500	0.01								11	160	10	150	7	150
600	0.01								13	160	10	150	8	150
700	0.01								13	160	11	150	8	150
800	0.02								14	160	12	150	8	150
900	0.02								14	160	12	150	9	150
1000	0.03								15	160	12	150	9	150
1100	0.04								15	160	13	150	9	150
1200	0.04								15	160	13	150	9	150
1300	0.05								16	160	13	150	9	150
1400	0.06								16	160	13	150	10	150
1500	0.07								16	160	14	150	10	150
1600	0.08								17	160	14	150	10	150
1700	0.09								17	160	14	150	10	150
1800	0.10								17	160	14	150	10	150
1900	0.11								17	160	14	150	10	150
2000	0.12								18	160	15	150	11	150
2100	0.13								18	160	15	150	11	150
2200	0.15								18	160	15	150	11	150
2300	0.16								18	160	15	150	11	150
2400	0.18								18	160	15	150	11	150
2500	0.19								18	160	15	150	11	150

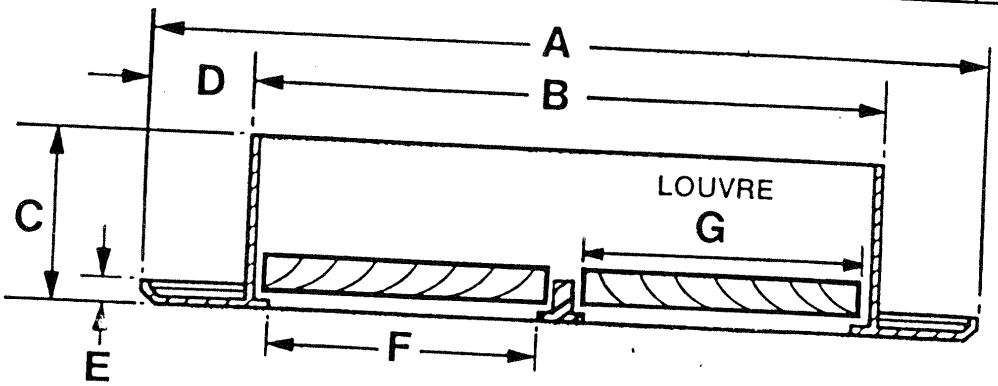

MODEL	9"	12"	14"	16"	18"	18" 'T' BAR	20" 'T' BAR
DIMENSION							
A	10½	13½	15¾	17¾	19¾	23¾	23¾
B	9	11¾	13¾	15¾	17¾	17¾	19¾
C	2½	2½	2½	3	3	3	3
D	¾	¾	¾	¾	¾	3	2
E	¼	¼	¼	¼	¼	1	½
F	4	5½	6½	7½	8¼	8¼	9¼
G	4¼	5¾	6¾	7¾	8½	8½	9½

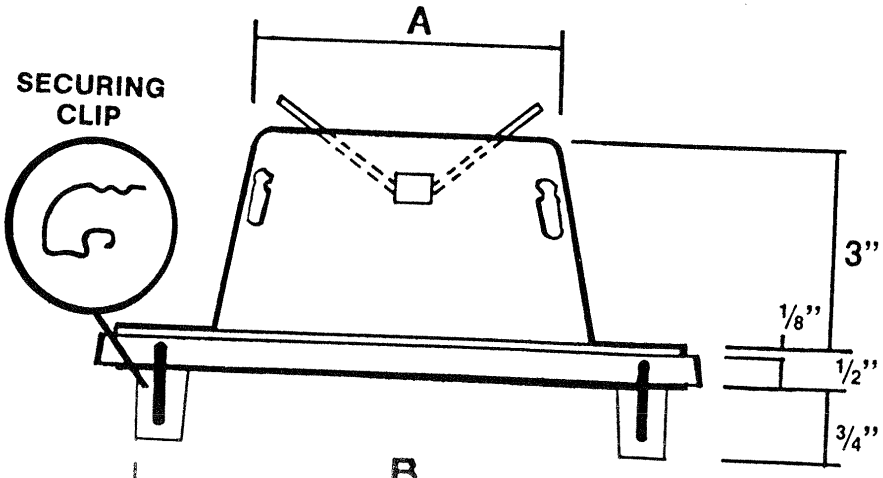

SIZES

DIM A	DIM B
6" DIA x 9" SQUARE	
8" DIA x 9" SQUARE	
10" DIA x 12" SQUARE	
12" DIA x 14" SQUARE	
14" DIA x 16" SQUARE	
16" DIA x 16" SQUARE	
16" DIA x 18" SQUARE	
18" DIA x 18" SQUARE	
18" DIA x 20" SQUARE	

PERFORMANCE SPECIFICATIONS

pelvaire ™ range of MULTI DIRECTIONAL OUTLETS

9" SQUARE LOUVRE-FACE CEILING DIFFUSER

Flow CFM	Static Pressure "H²O	SOUND POWER LEVELS (dB re 1 pW) Octave Band Centre Frequency (Hz) 125	250	500	1000	2000	4000	dB(A)	1-Way Throw	1-Way Angle	2-Way Throw	2-Way Angle	4-Way Throw	4-Way Angle
100	0.01	46	38	34	30			28	9ft	160°	7ft	160°	6ft	160°
200	0.03	49	42	39	39	22		34	13	160	11	160	9	160
300	0.07	52	47	45	45	35	26	40	16	160	14	160	11	160
400	0.13	56	52	50	50	44	35	45	19	160	16	160	12	160
500	0.20	59	57	54	54	50	42	50	20	160	17	160	13	160

12" SQUARE LOUVRE-FACE CEILING DIFFUSER

Flow CFM	Static Pressure "H²O	SOUND POWER LEVELS (dB re 1 pW) Octave Band Centre Frequency (Hz) 125	250	500	1000	2000	4000	dB(A)	1-Way Throw	1-Way Angle	2-Way Throw	2-Way Angle	4-Way Throw	4-Way Angle
200	0.01	44	34	27	18			23	11ft	160°	9ft	160°	7ft	160°
300	0.03	48	40	34	29			29	14	160	12	160	9	160
400	0.05	51	44	41	41	23	16	36	17	160	14	160	10	160
500	0.08	54	49	47	47	37	28	42	18	160	15	160	11	160
600	0.12	58	54	52	53	46	37	48	19	160	16	160	12	160
700	0.16	61	58	56	56	52	44	52	20	160	17	160	12	160
800	0.21	64	61	59	59	56	48	55	21	160	17	160	12	160

14" SQUARE LOUVRE-FACE CEILING DIFFUSER

Flow CFM	Static Pressure "H²O	SOUND POWER LEVELS (dB re 1 pW) Octave Band Centre Frequency (Hz) 125	250	500	1000	2000	4000	dB(A)	1-Way Throw	1-Way Angle	2-Way Throw	2-Way Angle	4-Way Throw	4-Way Angle
200	0.01	39							11ft	160°	9ft	155°	7ft	155°
300	0.02	44	28	26	20			22	14	160	12	155	9	155
400	0.04	49	38	37	28	20		30	16	160	14	155	10	155
500	0.07	52	44	42	37	28	20	35	17	160	15	155	11	155
600	0.10	54	49	48	44	35	28	41	18	160	15	155	11	155
700	0.13	56	52	51	50	41	33	45	19	160	16	155	12	155
800	0.17	58	55	53	55	45	37	49	20	160	16	155	12	155
900	0.22	61	58	56	58	49	41	52	20	160	17	155	12	155

16" SQUARE LOUVRE-FACE CEILING DIFFUSER

Flow CFM	Static Pressure "H²O	SOUND POWER LEVELS (dB re 1 pW) Octave Band Centre Frequency (Hz) 125	250	500	1000	2000	4000	dB(A)	1-Way Throw	1-Way Angle	2-Way Throw	2-Way Angle	4-Way Throw	4-Way Angle
300	0.01								10ft	160°	8ft	150°	6ft	150°
400	0.03	47	33	32				26	13	160	11	150	8	150
500	0.04	49	38	38	27			30	15	160	13	150	9	150
600	0.06	50	43	43	36	25	19	35	16	160	14	150	10	150
700	0.08	52	47	46	44	30	23	39	17	160	14	150	10	150
800	0.10	53	49	47	51	35	26	44	18	160	15	150	11	150
900	0.13	55	52	49	55	39	30	48	18	160	15	150	11	150
1000	0.16	56	54	51	56	43	34	49	19	160	16	150	11	150
1100	0.19	57	56	53	57	47	38	51	19	160	16	150	11	150
1200	0.23	59	58	55	59	51	42	53	19	160	16	150	12	150

18" SQUARE LOUVRE-FACE CEILING DIFFUSER

Flow CFM	Static Pressure "H²O	SOUND POWER LEVELS (dB re 1 pW) Octave Band Centre Frequency (Hz) 125	250	500	1000	2000	4000	dB(A)	1-Way Throw	1-Way Angle	2-Way Throw	2-Way Angle	4-Way Throw	4-Way Angle
400	0.00								11ft	160°	9ft	150°	7ft	150°
500	0.01								13	160	11	150	8	150
600	0.01	53	44	40	31	26	20	34	14	160	12	150	9	150
700	0.02	54	46	43	37	29	23	36	15	160	13	150	9	150
800	0.02	55	48	46	42	33	25	39	16	160	13	150	9	150
900	0.03	57	51	48	47	36	28	42	16	160	14	150	10	150
1000	0.03	58	53	49	50	39	32	45	17	160	14	150	10	150
1100	0.04	59	55	51	53	42	35	47	17	160	14	150	10	150
1200	0.04	61	56	53	55	44	38	49	17	160	15	150	10	150
1300	0.05	63	58	54	56	47	41	51	18	160	15	150	11	150
1400	0.06	64	60	56	58	49	44	53	18	160	15	150	11	150
1500	0.07	65	62	58	59	52	46	54	19	160	15	150	11	150
1600	0.08	67	63	59	60	56	48	56	19	160	16	150	11	150
1700	0.09	68	65	61	62	59	50	58	19	160	16	150	12	150
1800	0.10	69	66	62	63	61	51	59	20	160	16	150	12	150
1900	0.11	71	67	64	63	63	53	61	20	160	16	150	12	150

PERFORMANCE DATA NOTES

Sound Pressure Levels, dB(A) re 20 μPa calculated with 8dB deducted for typical room effect. Within the limits of measurement, noise levels and static pressures were identical for 1, 2 and 4 way patterns. All tests were done with A.C. Components metal hood and acoustic flexible duct above false ceiling.

Static pressures were measured within the nominal diameter section of the metal hood.

Throw measured per ISO-1984 (B): "The maximum distance from the centre of the core and a plane