AUTO-CURTAIN

INSTALLATION & INSTRUCTION MANUAL

Base Models: 506, 507, & 511

Options Include: gearbox, aluminum drum size, and sprocket drive.

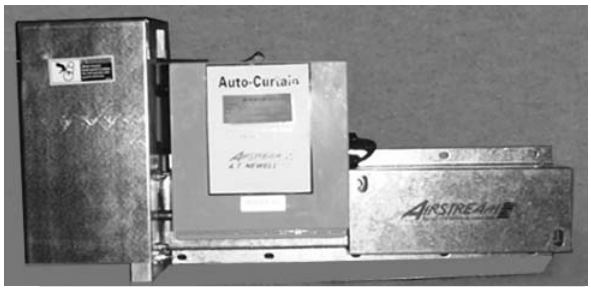

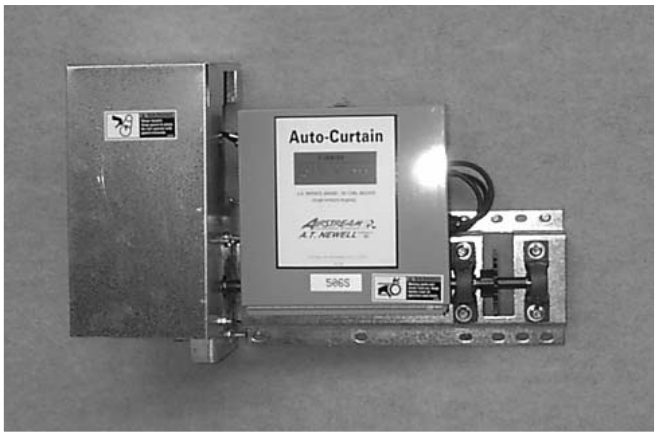

Owner's Manual

Manual # PNEG-472

12-15-04

PNEG-472

AIRSTREAM ventilation systems

a division of

THE GSI GROUP

Table of Contents

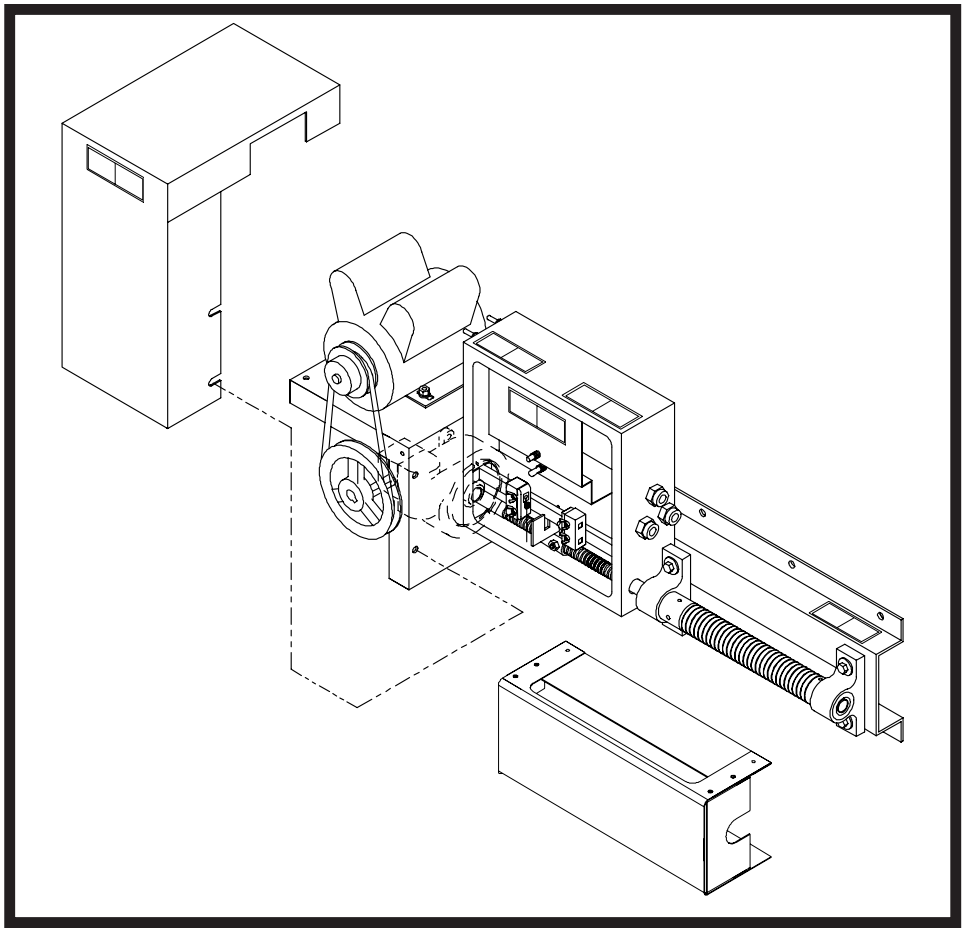

SAFETY FIRST
General Safety Statements

The GSI Group Inc's Principal concern is your safety and the safety of others associated with grain handling equipment. We want to keep you as a customer. This manual is to help you understand safe operating procedures and some problems which may be encountered by the operator and other personnel.

As owner and/or operator, it is your responsibility to know what requirements, hazards and precautions exist and inform all personnel associated with, or in the area of the equipment. Safety precautions may be required from the personnel. Avoid and alteration to the equipment. Such alterations may produce a very dangerous situation, where serious injury or death may occur.

SAFETY ALERT SYMBOL

The symbol shown is used to call your attention to instructions concerning your personal safety. Watch for this symbol; as it points out important safety precautions. It means "ATTENTION," WARNING," "CAUTION," and "DANGER." Read the message that follows and be cautious to the possibility of personal injury or death.

The GSI Group Inc. recommends that you contact your local power company and have a representative review your installation so your wiring will be compatible with their system and so that you will have adequate power supplied to your unit.

BE ALERT! Danger!

Personnel operating or working around electrical equipment should read this manual. This manual must be delivered with equipment to its owner. Failure to read this manual and its safety instructions is a misuse of the equipment.

This product is intended for the use of controlling the curtain only. Any other use is a misuse of the product!

This product has sharp edges! These sharp edges may cause serious injury. To avoid injury handle sharp edges with caution and use proper protective clothing and equipment at all times.

The safety pages that follow are to show you where you can find the safety decals. The photographs show exactly where the decals should be. If a decal has been damaged or is missing contact The GSI Group, Inc. for a free replacement.

DC-995 is located on the belt gaurd and on the electrical box.

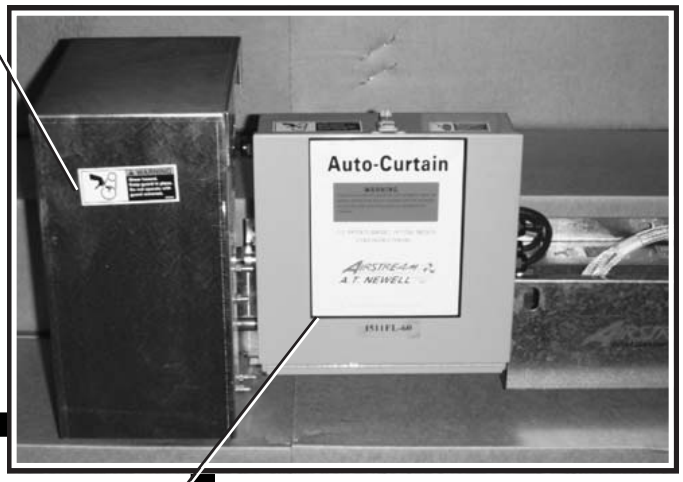

DC-644 is located on the front of the electrical box lid.

Auto-Curtain

WARNING

Curtains or doors must be left slightly open to admit sufficient air to sustain life for animals or poultry in case of power or mechanical failure.

U.S. PATENTS 3042001, 3511299, 3802479
OTHER PATENTS PENDING

AIRSTREAM ventilation systems
A.T. NEWELL A Division of GSI

P.O Box 20 Assumption, Il 62510
DC-644

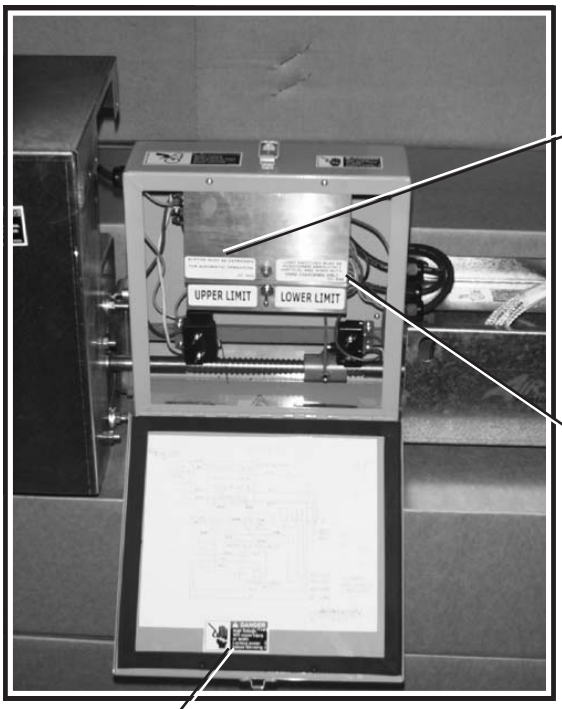

BUTTON MUST BE DEPRESSED

FOR AUTOMATIC OPERATION
DC-945

DC-945 is located inside the electrical box.

LIMIT SWITCHES MUST BE POSITIONED ABSOLUTELY VERTICAL AND WIRING NUTS HAND TIGHTENED ONLY
DC-946

DC-946 is located inside the electrical box.

DC-995 is located on the top of the electrical box.

DC-889 is located on the top of the and inside the electrical box.

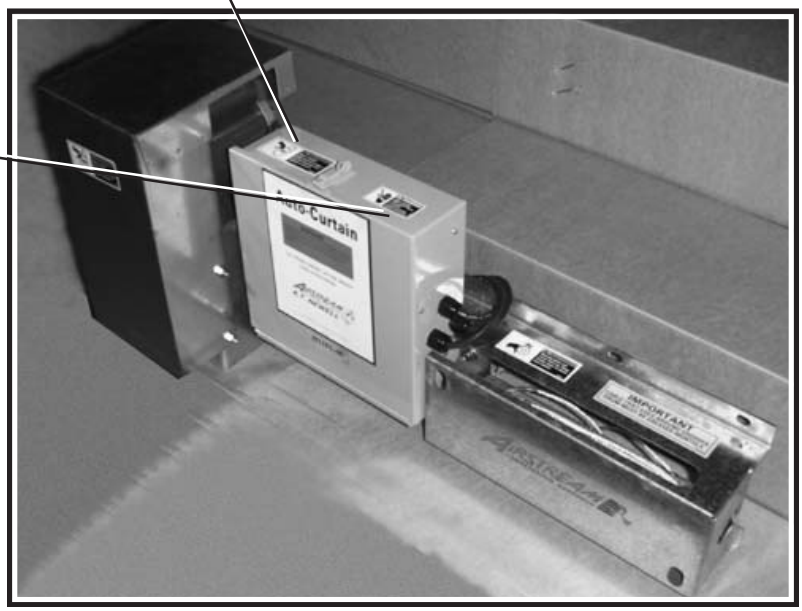

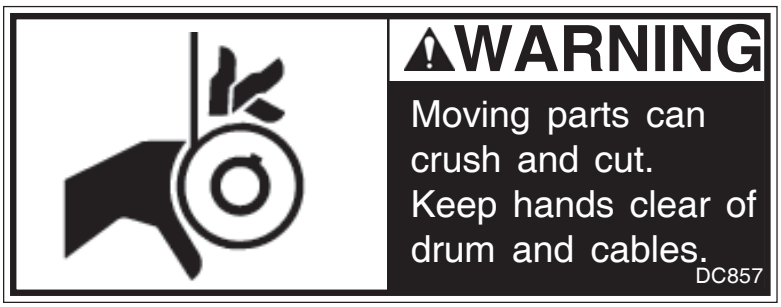

DC-857 or DC-856 is located on the drum cover.

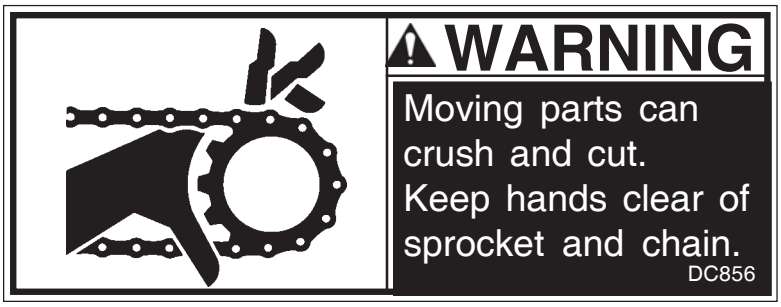

Machines which use a sprocket and chain in place of the drum and cable use DC-856 in place of DC-857.

DC-857 or DC-856 are also found underneath the drum gaurd mounted on the frame. This precautionart measure was taken in the event that the gaurd is removed.

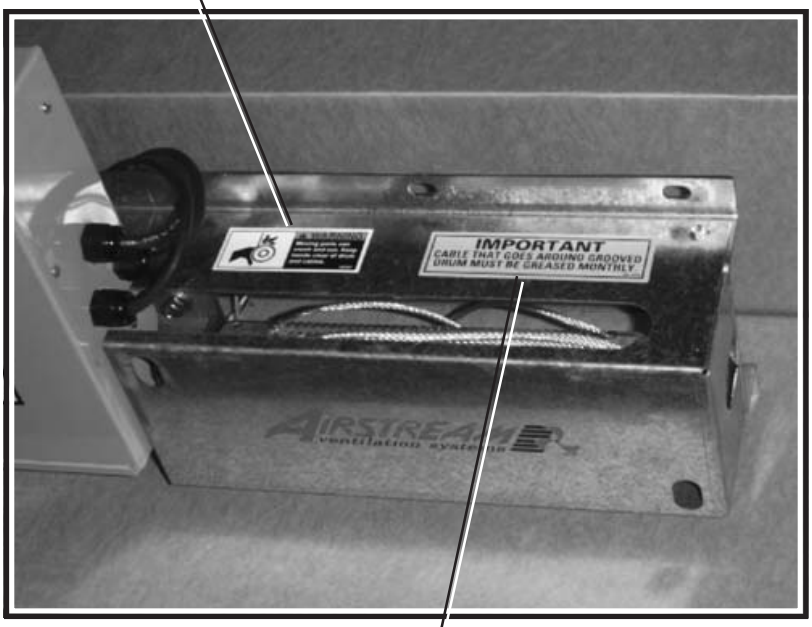

DC-5376 is located on the cover of the drum gaurd.

Options & Descriptions

Options Available

Timers:

5 Minute Nonadjustable Timer (1738)	OPEN 1:10 run time, 3:50 pause time. CLOSE 2:00 run time, 3:00 pause time.
5 Minute Adjustable Timer (1737)	Ability to set variable run/pause times during oper/close mode.

Gearboxes: ***Distance travel on a direct pull.***

"SLOW GEARBOX" 1200:1 (1333-12)	*4" travel per minute
"FAST GEARBOX" 200:1 (1333-2)	*24" travel per minute

Aluminum Drums:

1 5/8" Aluminum Drum (1121)	9 1/2' of cable pull per side of drum
2 3/4" Aluminum Drum (1122)	12 1/2' of cable pull per side of drum

Model 506 Information

Timer

Model **506** has a four circuit nonadjustable 5 minute timer. This timer is preset at the factory. When the **506** is opening the curtains, it will run for 1 minute 10 seconds and pause for 3 minutes 50 seconds. When the **506** is closing the curtains, it will run for 2 minutes and pause for 3 minutes. If the thermostat is not satisfied after one cycle during open / close, the timer will repeat the run / pause times until the thermostat is satisfied or the upper / lower limit switch is depressed.

Hour Timer Switches - Positive Ventilation

The hour timer switches are used primarily in the cooler months to allow positive ventilation / fresh air into the confinement house.

The **506** has two positive ventilation control switches. These switches are located outside of the control box on the left hand side. When these switches are down, the positive ventilation mode is off. When one switch is up / on (it does not matter which switch), once an hour the machine will disregard the temperature and will run the curtains down for 1 minute allowing fresh air into the house. After the 1 minute run time, the machine will go back into automatic mode. The machine will not run until the thermostat tells the machine that it is too cool in the barn. When both switches are up / on, every 30 minutes the machine will disregard the temperature and run the curtains down for 1 minute. After the 1 minute run time, the machine will go back into automatic mode.

Model 507 Information

Timer

Model **507** has a two circuit 5 minute adjustable timer. The timer allows the opening and closing times of the curtain to be customized in 2.5 second increments. There are two cams for adjustment. The upper cam controls the opening run / pause times and the lower cam controls the closing run / pause times. (SEE PAGE 11,12 FOR TIMER ADJUSTMENT)

Rapid Close Function

The rapid close function is beneficial during the spring and fall when there is rapid temperature change in the evenings. The rapid close function will alleviate the chill on the livestock by speeding up the time it takes for the curtains to close.

The rapid close is controlled by the single toggle switch located outside of the control box on the left hand side. When this switch is down, the rapid close function is off. When this switch is up / on and the thermostat signals the machine to close, the timer is bypassed and the machine will continuously run closed. The machine will stop closing only if the thermostat is satisfied or the upper limit switch is depressed.

Model 511 Information

No Timer

The **511** machine is ideal for use with an integrated ventilation control because it has no internal timing mechanism. The **511** is totally dependent on an outside source to tell the machine when to raise or lower the curtains automatically. This machine also has the ability to be operated manually and comes standard with a fan turn on / off switch (latch-out switch).

Auto-Curtain Information

Thermostat

To regulate the temperature within a confinement house while using an Auto Curtain Model **506** or **507**, it is recommended that a 2 stage thermostat is used. The temperature at which you set the thermostat determines the amount of ventilation in relation to the temperature of the house. When the room temperature is within +/- 1°F the thermostat setting, the machine will stop the curtain movement until the ambient temperature changes. Follow your field managers recommendations for thermostat settings.

The location of the thermostat is very important. Never place the thermostat in direct sunlight, close to a radiant heater or near the direct output of a convective heater. If the thermostat is near a heat source, false room temperatures may be detected. False room temperatures may be detected if the thermostat is mounted near an outer wall or near a draft. The ideal location is near the center of the room just above the livestock yet out of their reach.

Fan Turn ON / OFF Switch (Latch-out Switch)

The fan turn on / off switch kit (AC1568) allows the on / off operation of another piece of ventilation equipment. For example, a fan can be controlled by this switch during tunnel operation.

Switch kit AC1568 can be used on any model of Auto-Curtain Machine. AC1538 does come standard with Model **511**.

Shear Pin

The Auto-Curtain Machines have a shear pin which will shear if exceptional strain occurs. The shear pin (#1342) is located where the gearbox and drive shaft are connected. **NOTE: If the shear pin shears, it will be necessary to replace it and readjust the limit switches. Be sure to locate the cause of the strain and correct the problem, otherwise the new pin will shear also**.

Cables and Curtains

The cable and curtains need to move freely without obstructions, such as: cable clamps from splices dragging over pulleys, brackets, and rafters. Cable should be periodically checked for excessive wear or kinks where the cable is running around pulleys and through brackets. When replacing cable, all of the pulleys should be checked for wear. Pulleys with flat spots, grooves, or excessive wear should be replaced. Counter weights that are used on the main line cable should also move freely and not drag or hang-up. If the screen wire is not flush with the board on the top of the opening, slide-over guides can be installed to make sure the curtain does not hang up on the board. **Note: If a splice is made in the cable between any brackets, use three cable clamps to fasten the two pieces together. Make sure there is enough travel for the clamps to stay out of the pulleys.**

Brackets and Pulleys

The AC1821 bracket assembly (see Fig. 1 pg. 8) should be mounted by through bolting the bracket onto a beam or some other solid foundation. The bracket mounts directly over the center of the grooved drum on the machine (see Fig. 2 pg. 8), with (4) 7" (17.78cm) bolts supplied in the installation kit. The AC1821 bracket handles more load than any other bracket on the building, so it is critical that it is mounted correctly. Moving pulleys need to be positioned so that they do not come in contact with other pulleys, brackets, or any other object.

Counter Weights

Counter weights provide tension on the cable system and keep the cables in the pulleys track. The location of the machine determines where the counter weights are located. (See Fig. 9 pg. 16).

Auto-Curtain Information

Hand Winches

Hand winches can be used in conjunction with the Auto-Curtain Machines to raise and lower the curtains when they are configured into the main line cable system. The hand winches are used primarily as a precautionary measure during power failure. When power is not present, the Auto-Curtain Machines will not work. The hand winches can be operated manually to ventilate the confinement house.

Do not use the hand winches unless in an emergency.

When the hand winch is used, the Auto-Curtain Machine actuator will not move even though the curtains are moving. After the hand winch is used, the limit switches must be readjusted. If the switches are not readjusted, the curtain may be at a different position than the limit switches were set for. This can allow the curtain to be pulled too tight.

If the hand winches are used, the curtains will need readjusted for the limit switch position. First, make sure the curtain is all the way down. Next, raise the curtain with the machine in manual mode until the upper limit switch is depressed or the curtain clears the top of the opening. Then, move the curtain with the hand winch until the reinforcement rod just clears the top of the curtain opening and make sure the upper limit switch is depressed. The limit switch is now readjusted.

It is important that the curtain is not raised too high and pulled tight. When curtains are pulled too tight, the work load of the Auto-Curtain increased substantially.

LIMIT SWITCHES

There are (2) limit switches located near the bottom of the Auto-Curtain control box. These adjustable switches stop the Auto-Curtain from advancing past the upper and lower limits set by the user. (See FIG. 3 pg. 9 to set limits) Either switch is activated by the actuator 2 that travels on the drive shaft 3 . When the actuator depresses the switch, the machine stops.

An upper limit switch that is set too high can allow the curtains to be pulled too tight. When this happens, the load on the machine is increased significantly and can cause the shear pin to shear, break rafters, cables, or pulleys.

A lower limit that is set too low can allow the cable to unwind off of the aluminum rum. When this happens, the cables do not always settle back into the appropriate grooves and the cable can wind on top of itself.

It is important that the cables wind onto the aluminum drum in a consistent fashion. By winding correctly, the limit switch settings also remain accurate.

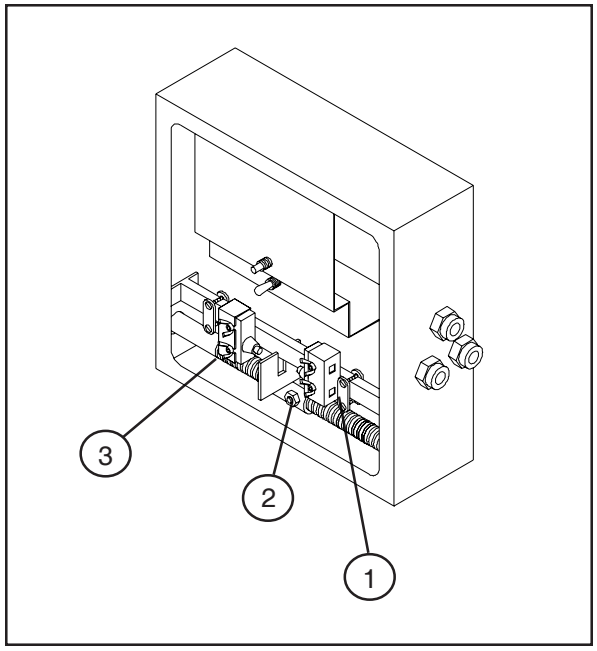

Installing the AC1821 Bracket Assembly

Mount the 1902AA pulleys to the AC1821 bracket directly left and right of the center holes in the bracket (see Fig. 1). This will help the cable wrap around the grooved drum in a single layer and reduce the chance of the cable binding. The 1902AA pulleys have grease inserts in them for periodic maintenance, make sure they are accessible.

Mount the AC1821 bracket assembly so that the grooved drum is directly below the mid-point of the two pulleys see (Fig. 2). This assures that the cable is wound properly onto the drum and does not overlap itself. The ideal position would have the cables directly vertical, with all the necessary cable to close the curtains completely wound on the grooved drum. Grease should be applied to the cable that wraps around the grooved drum at least once every three months. Cables should be inspected periodically for evidence of wear or damage.

It is recommended that the bracket be mounted to a 4 x 4 or some other solid part of the frame. Use (4) 7" (17.78cm)bolts supplied in the installation kit, through the frame to mount the bracket (see Fig. 7 pg. 14).
DO NOT USE LAG BOLTS!

Fig. 1

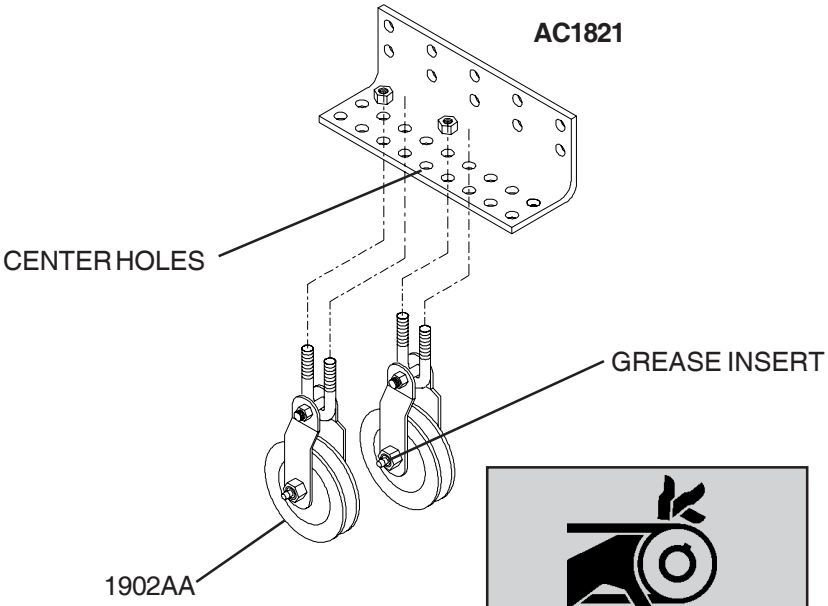

Fig. 2

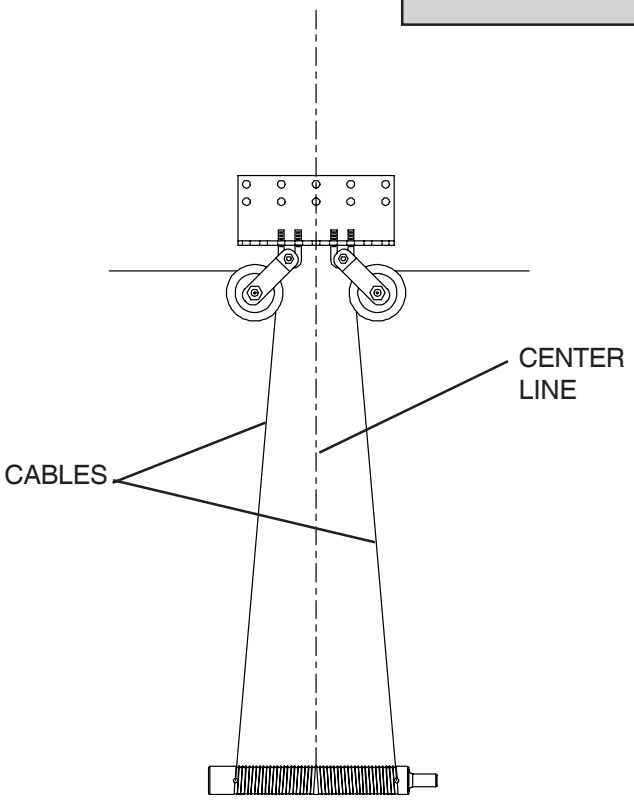

Installation Instructions

ALWAYS DISCONNECT AND LOCK OUT POWER BEFORE WORKING ON OR AROUND THE MOTOR.

When mounting your Auto-Curtain it is important to use a solid surface on the building. It is recommended that two (wooden) 2 x 4's (2 inches x 4 inches) are used directly behind the base of the machine to provide a flat surface. The machine should be secured to the building using (4) full threaded rods and large washers supplied in the installation kit, these rods should go through the holes in the frame of the machine, (wooden) 2 x 4's, 4 x 4 (4 inches x 4 inches), or other solid frame components of the building. For remaining holes a (wooden) 2 x 10 (2 inches x 10 inches) brace can be mounted inside the building across the wall to bolt through if needed. **DO NOT USE LAG BOLTS TO MOUNT THE MACHINE!**

Drill holes through wall to insert electrical wires from Auto-Curtain to inside of building; insulate to comply with electrical codes.

It may be necessary to add extra support beams to your building to ensure a solid installation. For example (see Fig.7) an extra 4 x 4 was added to support the machine. On an end installation a beam off of the building may be required to install the machine.

It is also recommended that the machine be mounted 24"- 48" from the bottom of the machine to the ground. This enables easy access for maintenance and prevents moisture problems. The machine should not be mounted on or close to the ground, water buildup could shorten the life of the machine or cause failure. Building a shelter over the motor and control box may be required to shield these components from the weather. This can be done by using tin and two pieces of lumber, and leaning over the machine.

Before splicing into the main cable, check the location of the actuator (1) on the drive shaft (2). The actuator should be on the far right side of the drive shaft. If not, run the machine in manual mode, it may be necessary to move the weld nut and limit switch first, until the actuator is in the correct position. Now the cables can be spliced. Next, set the limit switches (see page 9).

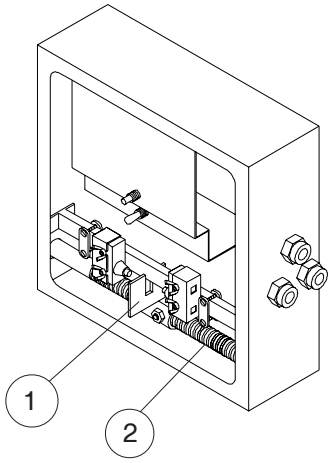

Caution: Extra care must be taken while operating the Auto-Curtain, before the upper and lower limit switches are set correctly. Also, the cable system and pulleys need to be checked for obstructions before operating the machine.

Mounting Recommendations for Center House Installation (Outside)

Fig. 3

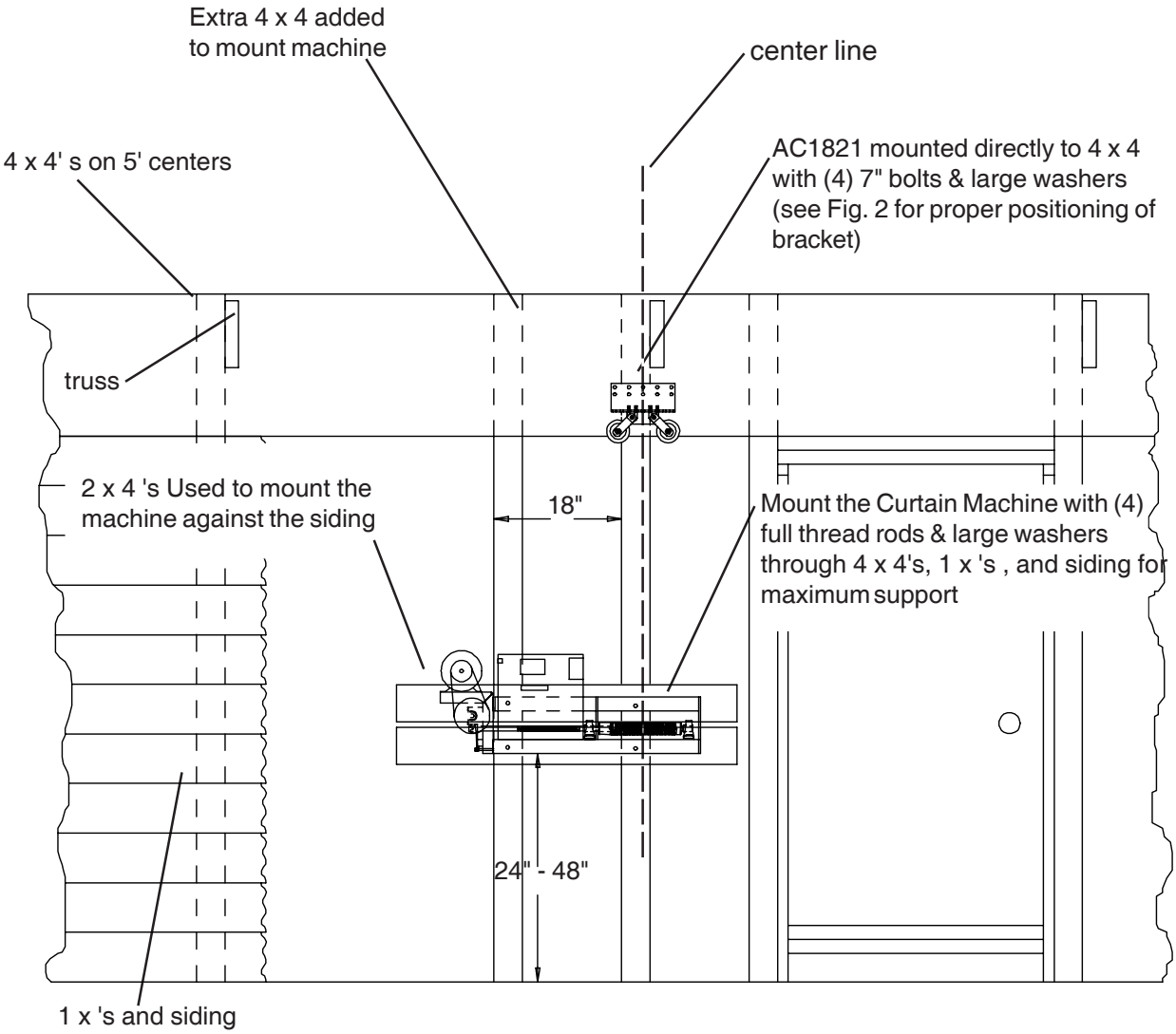

Basic Center Installation
Pulling One Side of the House

Fig. 4

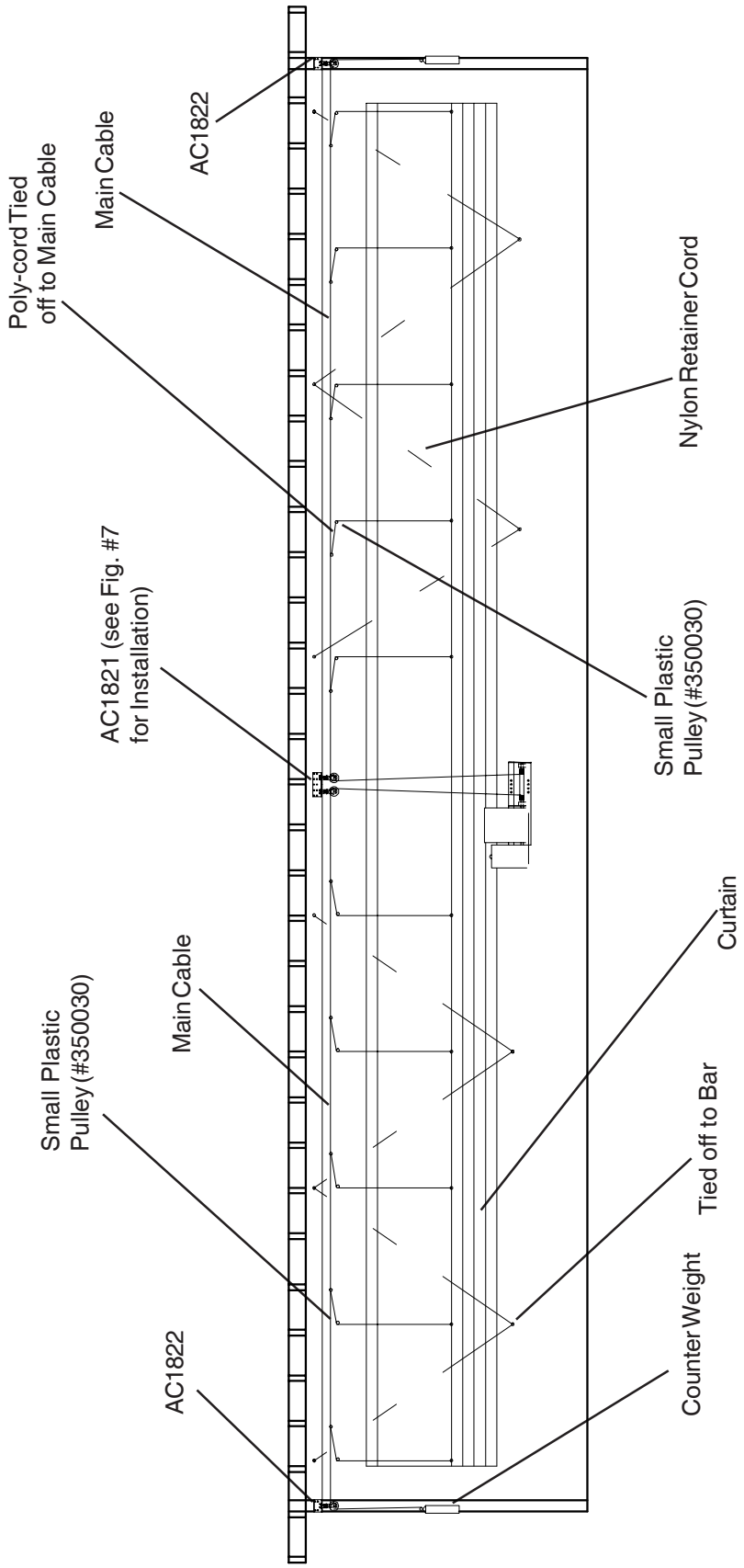

NOTE: We Recommend any Building Over 380 Feet Should have a Curtain Machine for Each Side of the House.

Installation the Counter Weights

Fig. 5

Run the cable through the eyebolt on the counter weight and tie it off to a truss. This will stop the counterweight from spinning and twisting causing the cable to misalign.

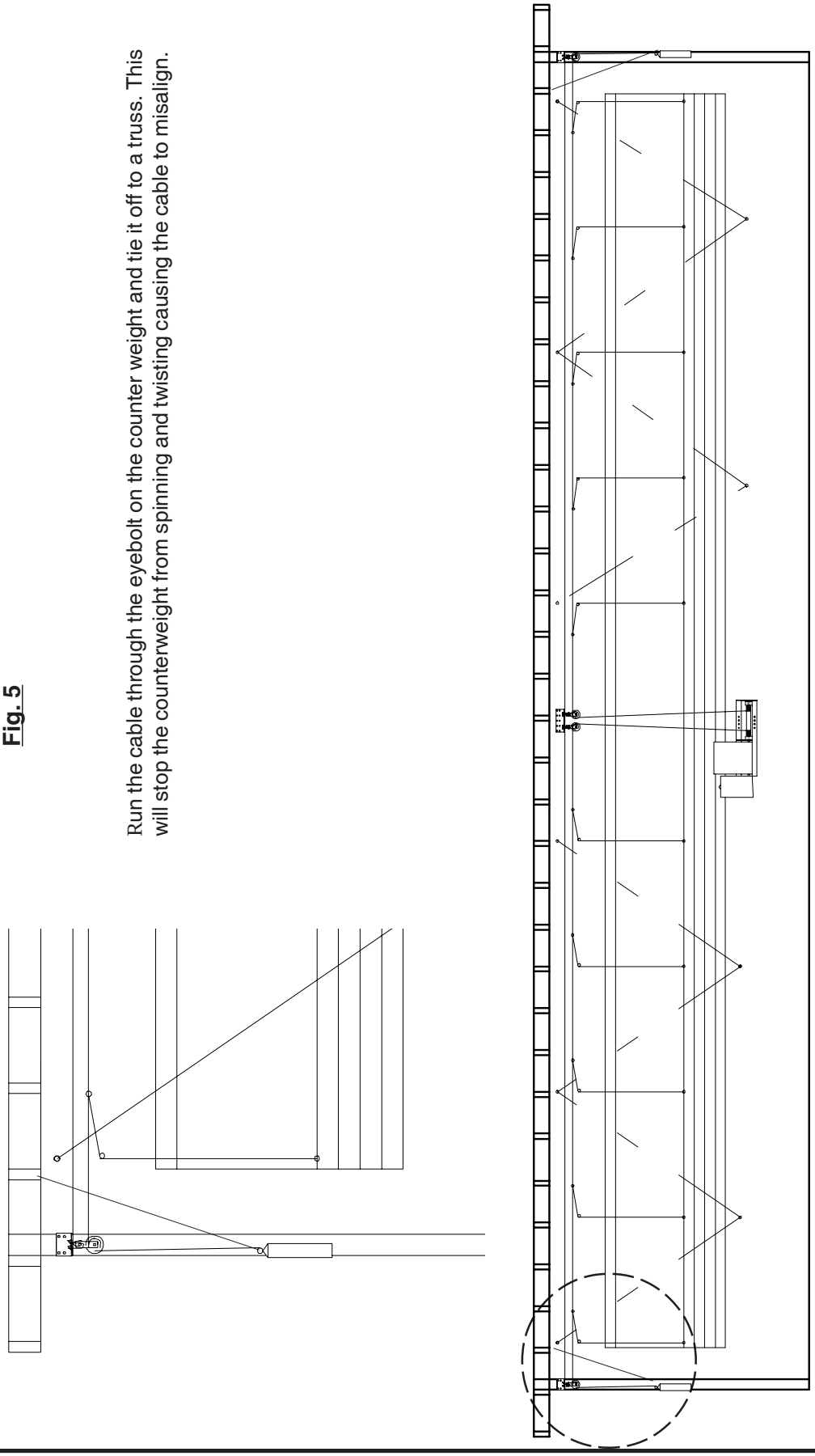

Spacing the Small Lift Pulley

Fig. 6

Attach the poly-cord to the main cable, when the curtain is fully down, the poly-cord is attached 1"-3" in front of the pulley.
Take the height of the curtain and add 6", this will be the space needed for the tied off poly-cord to travel freely.

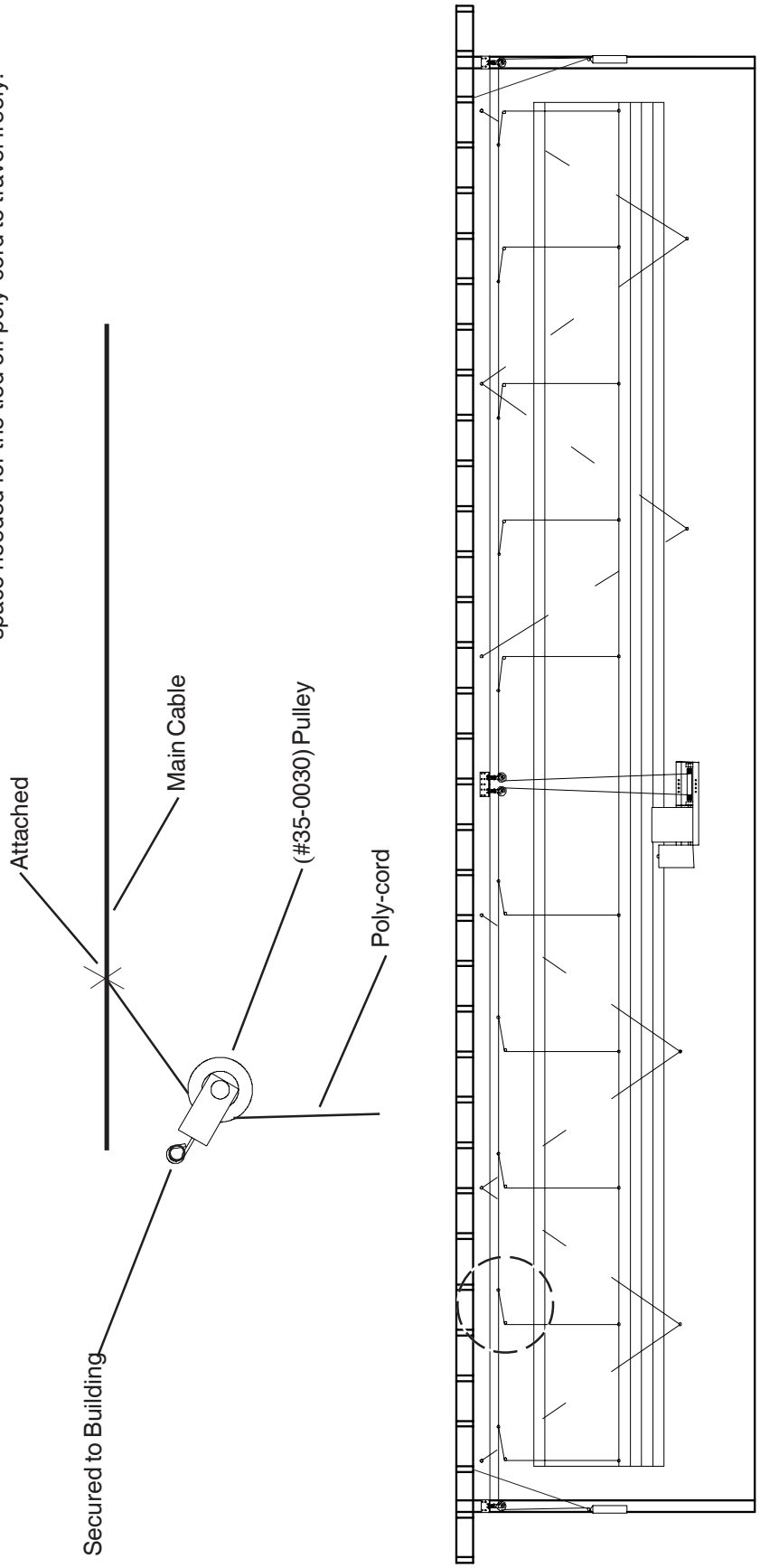

Basic End Installation
Pulling Both Sides of the House

Fig. 7

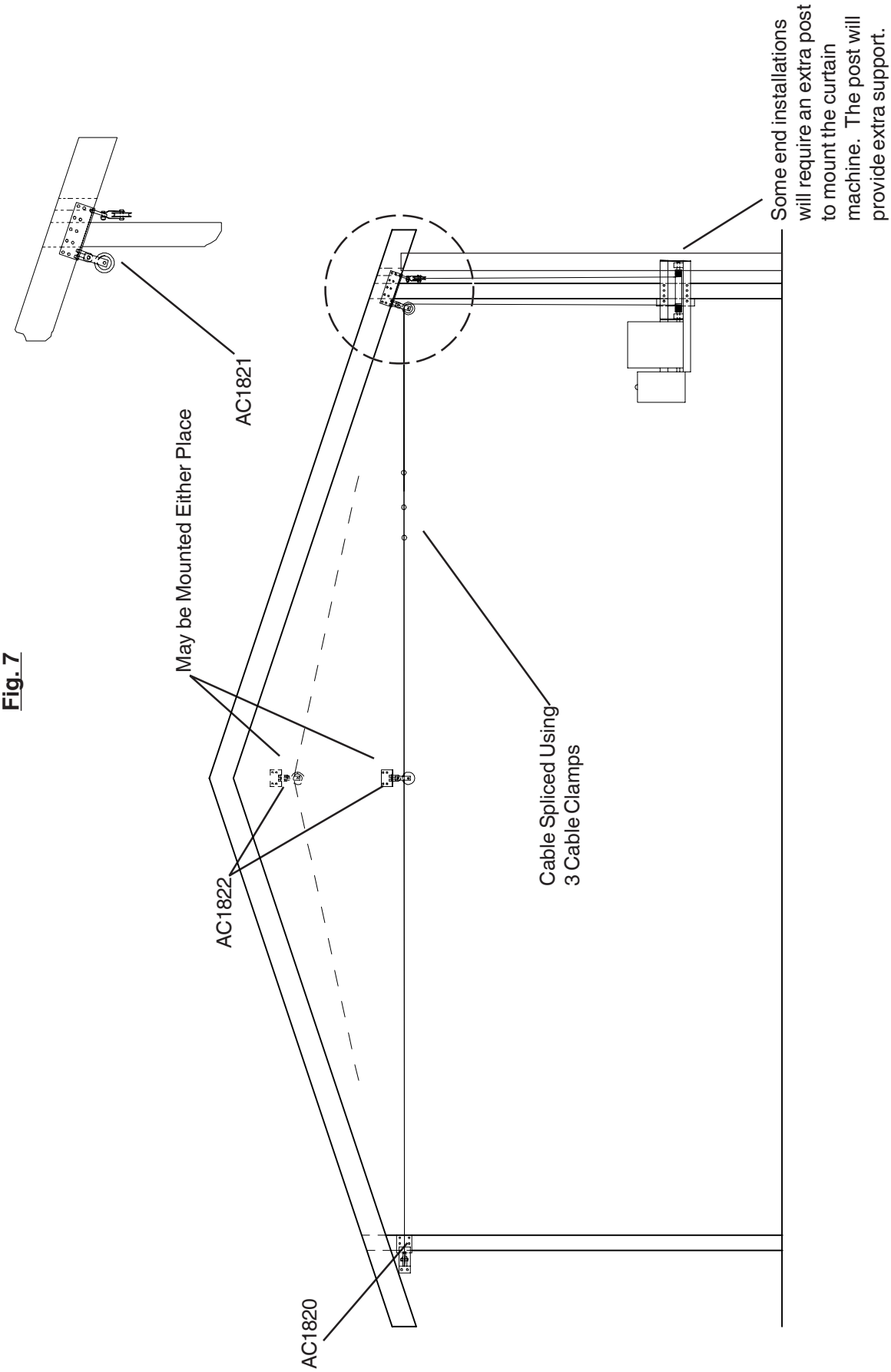

Outside Endwall Mount

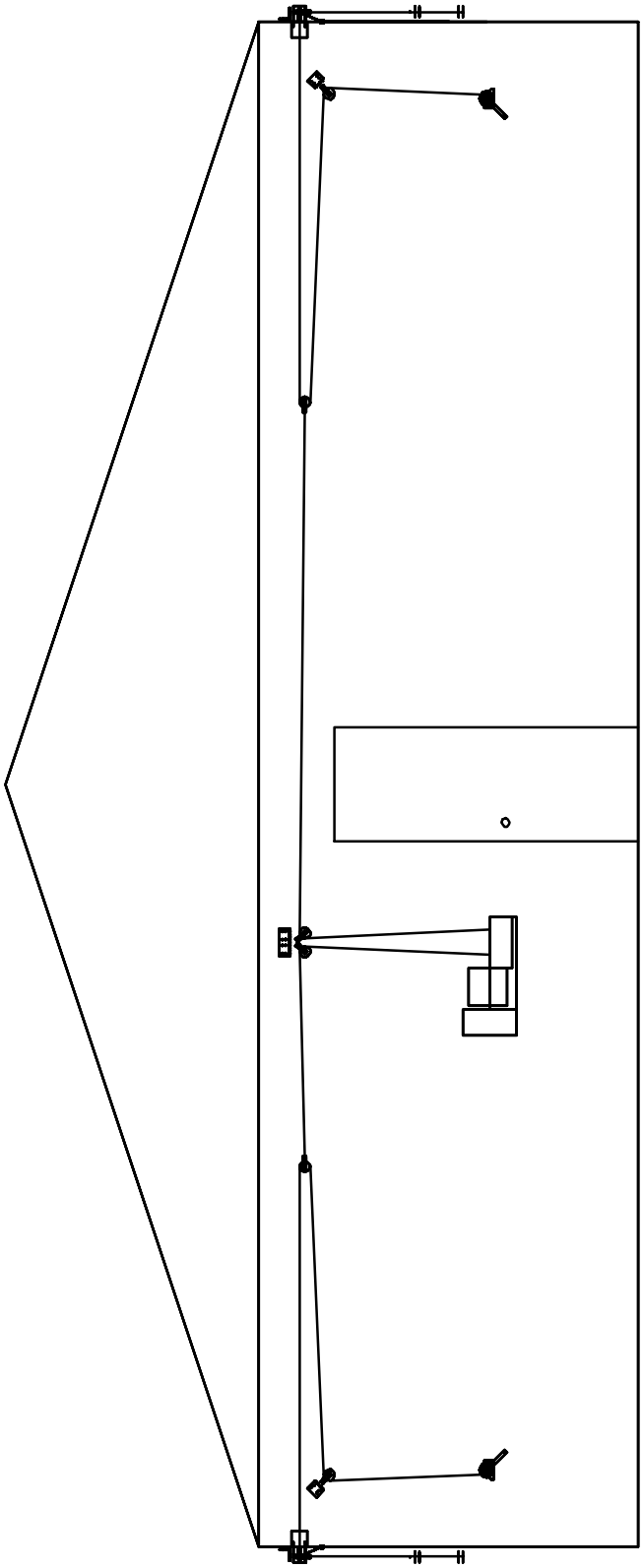

The above illustration shows 1:2 cable configuration. This means: 1 foot of cable movement at the machine equals 2 feet of cable movement at the curtain.

Outside Endwall Mount

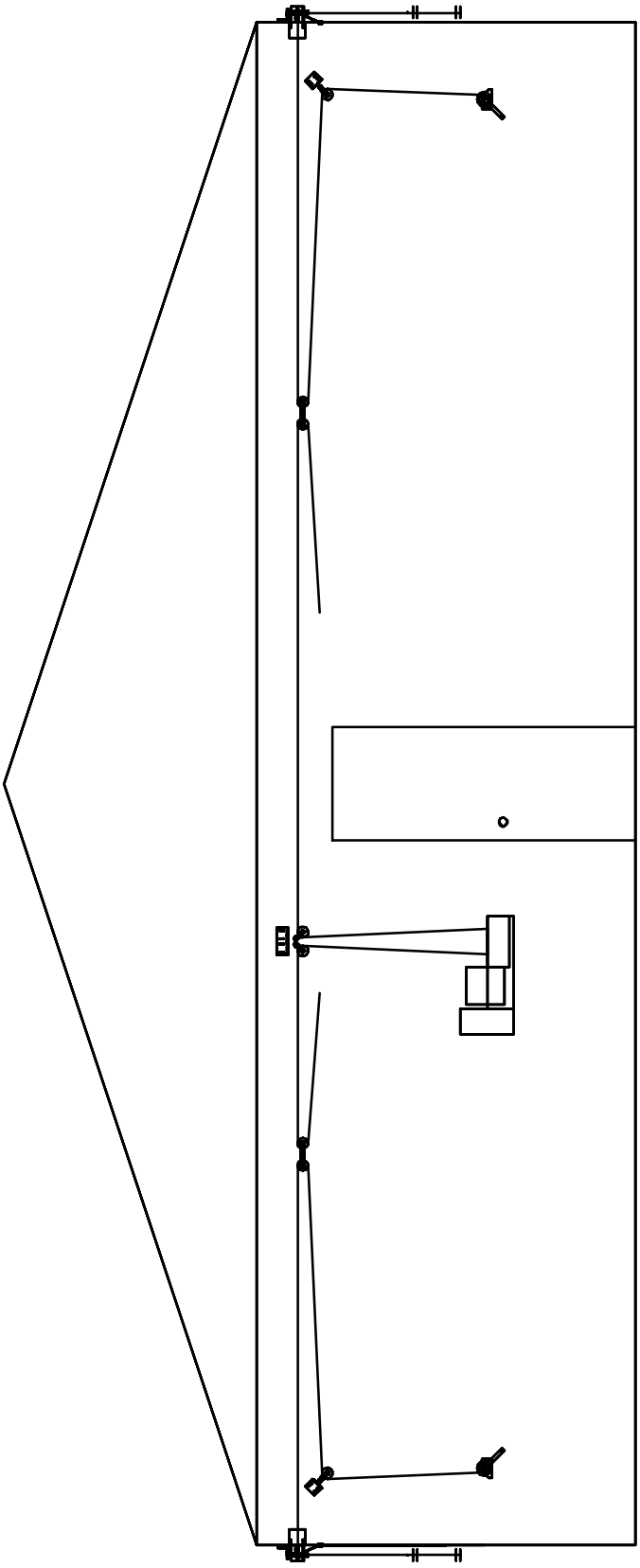

The above illustration shows 1:1 cable configuration. This means: 1 foot of cable movement at the machine equals 1 foot of cable movement at the curtain.

Outside Endwall Mount

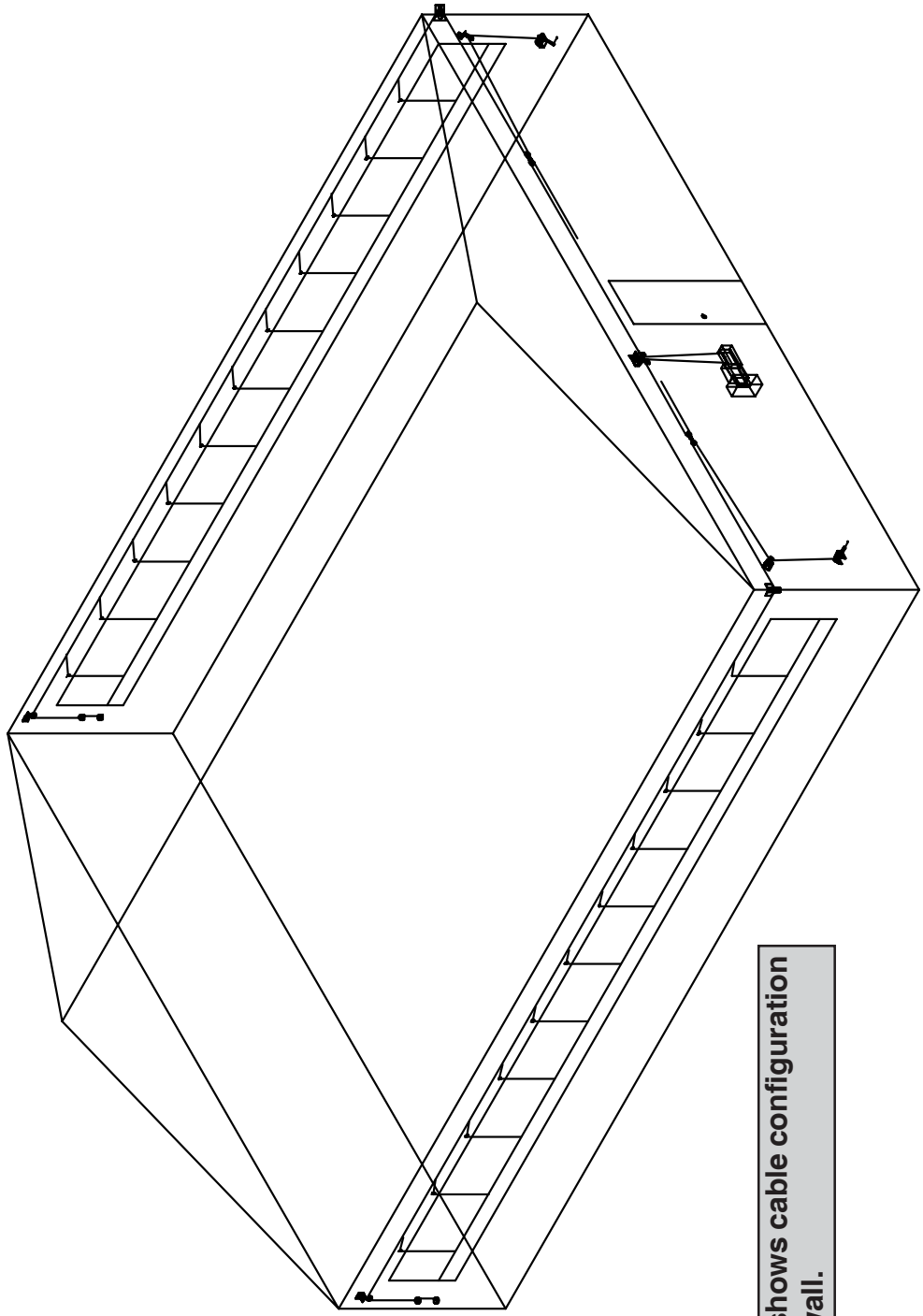

Illustration shows cable configuration on the sidewall.

The above illustration shows 1:1 cable configuration. This means: 1 foot of cable movement at the machine equals 1 foot of cable movement at the curtain.

Outside Sidewall Mount

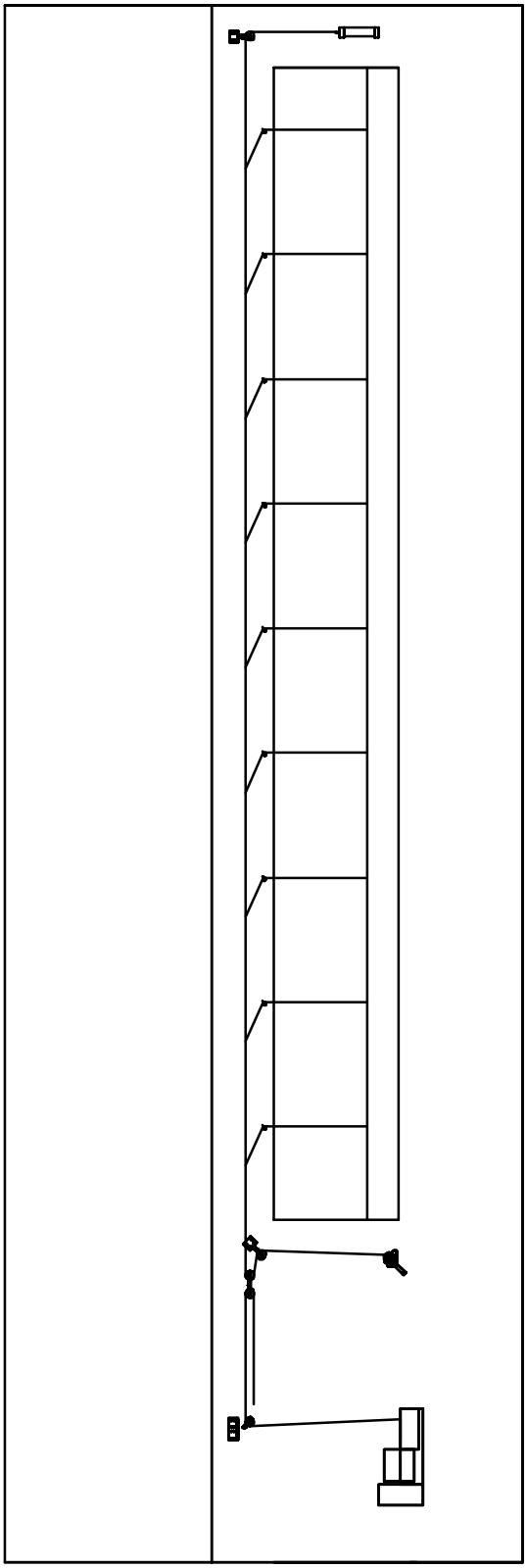

The above illustration shows 1:1 cable configuration. This means: 1 foot of cable movement at the machine equals 1 foot of cable movement at the curtain.

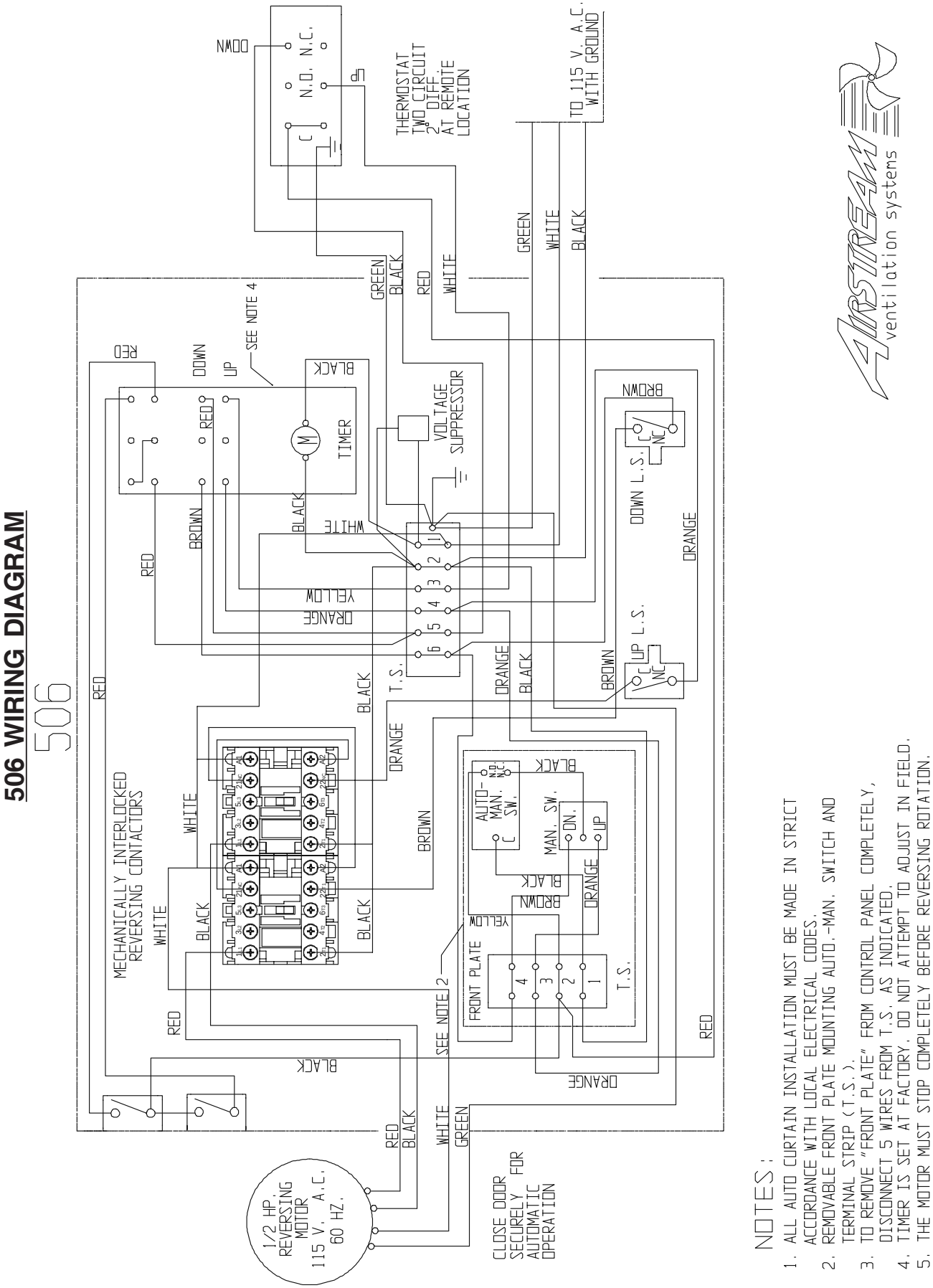
506 WIRING DIAGRAM
506
DOWN
N.O. N.C.
C
UP
THERMOSTAT TWO CIRCUIT 2° DIFF. AT REMOTE LOCATION
TO 115 V. A.C. WITH GROUND
GREEN
WHITE
BLACK
RED
SEE NOTE 4
DOWN
UP
TIMER
VOLTAGE SUPPRESSOR
DOWN L.S.
UP L.S.
ORANGE
YELLOW
BROWN
T.S.
MECHANICALLY INTERLOCKED REVERSING CONTACTORS
AUTO-MAN. SW.
MAN. SW.
FRONT PLATE
SEE NOTE 2
1/2 HP. REVERSING MOTOR 115 V. A.C. 60 HZ.
CLOSE DOOR SECURELY FOR AUTOMATIC OPERATION
NOTES:
1. ALL AUTO CURTAIN INSTALLATION MUST BE MADE IN STRICT ACCORDANCE WITH LOCAL ELECTRICAL CODES.
2. REMOVABLE FRONT PLATE MOUNTING AUTO.-MAN. SWITCH AND TERMINAL STRIP (T.S.).
3. TO REMOVE "FRONT PLATE" FROM CONTROL PANEL COMPLETELY, DISCONNECT 5 WIRES FROM T.S. AS INDICATED.
4. TIMER IS SET AT FACTORY. DO NOT ATTEMPT TO ADJUST IN FIELD.
5. THE MOTOR MUST STOP COMPLETELY BEFORE REVERSING ROTATION.

507 WIRING DIAGRAM

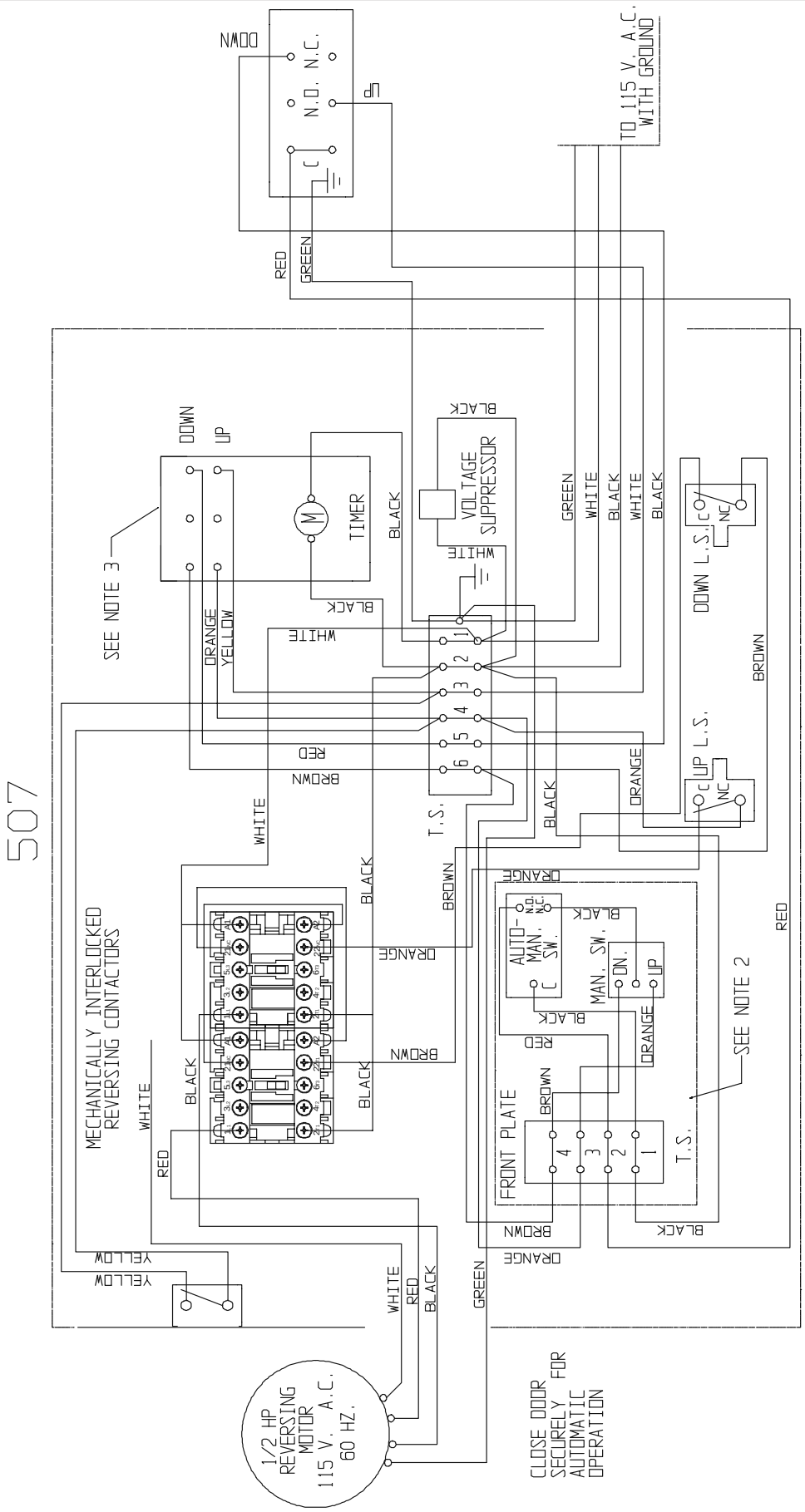

NOTES:

1. ALL AUTO-CURTAIN INSTALLATIONS MUST BE MADE IN STRICT ACCORDANCE WITH LOCAL ELECTRICAL CODES.
2. TO REMOVE "FRONT PLATE" FROM CONTROL PANEL COMPLETELY, DISCONNECT 4 WIRES FROM TERMINAL STRIP (T.S.) AS INDICATED.
3. TIMER IS FIELD ADJUSTABLE. SET TIMER WHEELS FOR DESIRED CURTAIN TRAVEL TIME PER FIVE MINUTE CYCLE.

511 WIRING DIAGRAM

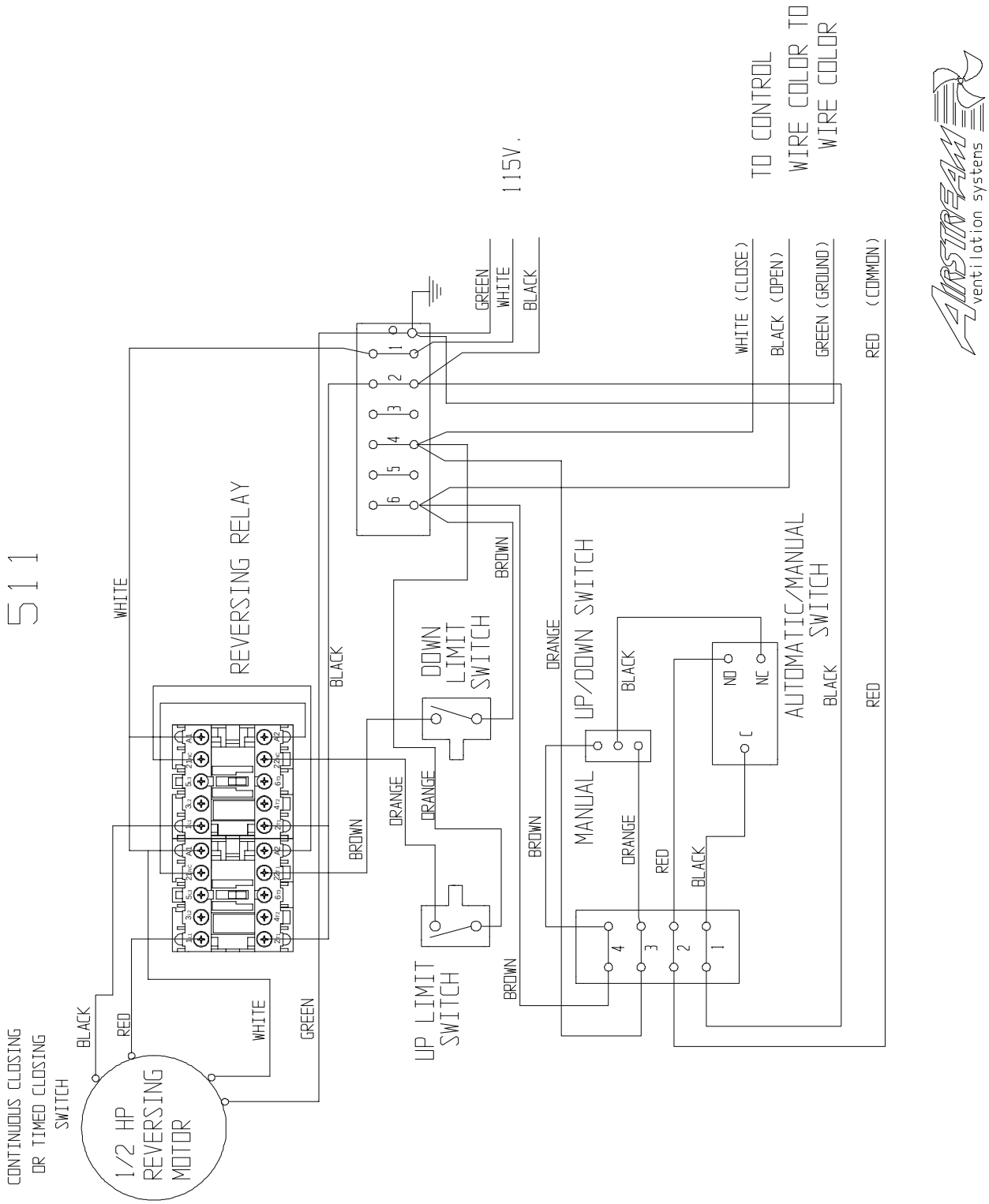

Fig. 8 LIMIT SWITCHES

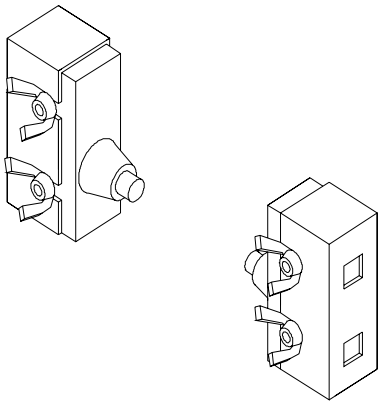

CONTROL BOX

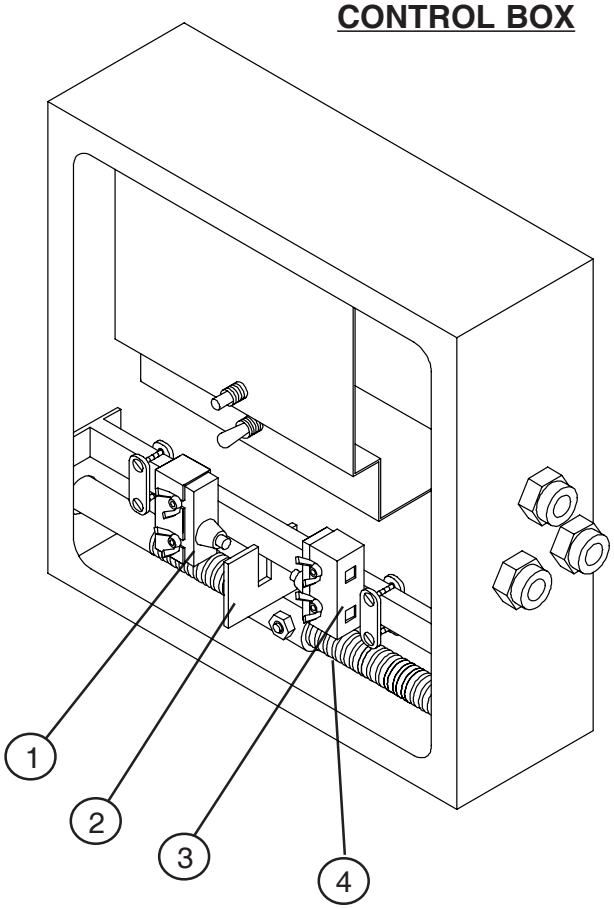

NOTE: IF ANY ADJUSTMENTS ARE MADE TO KEEP THE CURTAINS FROM CLOSING OR OPENING COMPLETELY, ONLY MOVE THE LIMIT SWITCHES NEVER THE WELD NUT STOP.

Setting the AC1572 Limit Switch Kit

After the AUTO-CURTAIN is properly mounted on the building, and all electrical connections are completed the limit switches can be set. First, raise the curtain up slightly with the manual switch until both cables on the grooved drum have tension on them. The drum should have 2 -3 wraps of cable on each end before load is applied. At this point, stop the machine and set the lower limit switch by loosening the wing nuts (2) and sliding the right switch on the t-bar (3) to the left until it makes contact with the actuator (4) and depresses the limit switch. Check to see if the switch is vertical and retighten the wing nuts. Next, move the weld nut stop (1) up against the back of the switch and tighten the two screws on the stop. Now that the lower limit switch is set, run the curtain to the top. As the bottom of the seam for the reinforcing rod just clears the top of the opening turn the AUTO-CURTAIN off.

NOTE: When setting the upper limit switch, make sure the curtain if not pulled tight past the top of the opening. curtains that are pulled tight increase the load on the machine.

To set the upper limit switch (switch to the left of the actuator), slide the switch to the right until the switch is depressed. While the switch is depressed, tighten the wing nuts to keep the switch in place. Lastly, move the weld nut stop against the switch and retighten.

Reverse Operation Iinstructions

Instructions for Reverse Operation of the Machine

For curtains or doors attached at the top which draw or pull cables to open windows or curtains from the bottom up, it is necessary to change the internal wiring of the Auto-Curtain to put the timers and thermostat in proper sequence.

To achieve this:

1) Unplug the Auto-Curtain from the electrical outlet.

2) Open the front door and remove the front plate.

3) On the six-pole terminal block mounted on center of the control box, switch the two brown wires on the bottom side of the terminal #6 with the two orange wires on the bottom side of terminal #4.

4) Replace the front plate.

5) Reconnect plug to electrical outlet.

Fig. 9

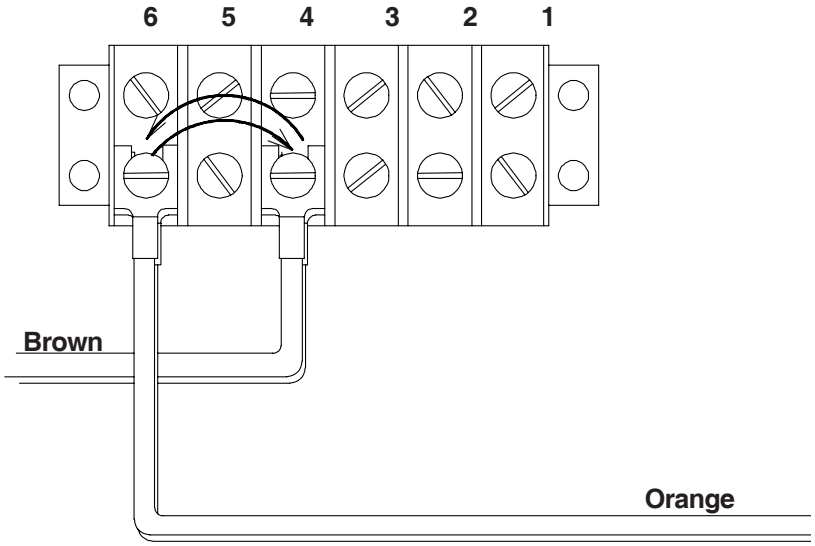

Fig. 10 **AC1737 TIMER**

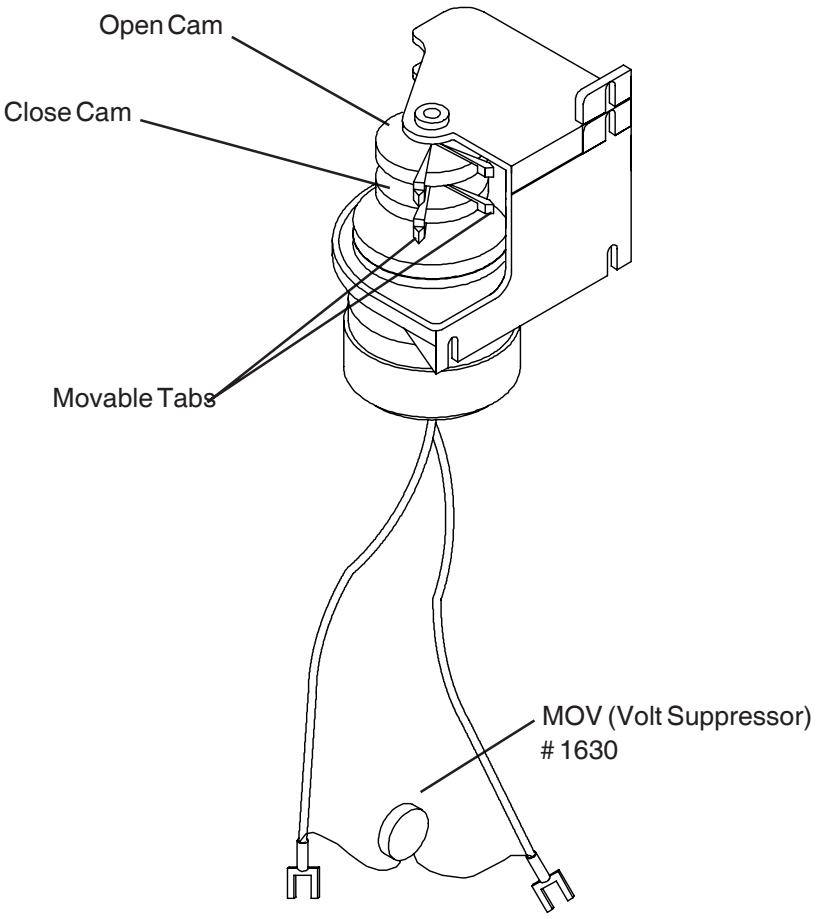

Instructions for Setting Five Minute Adjustable Timer on the 507 Machine

The timer is located in the top right hand corner of the Auto-Curtain Model **507**. It is a two circuit, 5 minute cycle timer with separate adjustable cams for customizing the opening and closing (run/pause times) of the Auto-Curtain. The two movable tabs on each cam determine the "turn on" and "turn off" points for that circuit. The sum of the run time plus the pause time for each circuit will always equal 5 minutes. Each cam has a total of 120 serrations (notches). Each notch represents 2.5 seconds of the 5 minutes. The smallest amount of time, which can be set by having the tabs on the same cam touch each other, is 12.5 seconds (5 notches).

At the bottom of this page and the next page are diagrams on how to set the timer. They explain how to set the (run/pause times) of both the open and close circuits. The three circles on this page represent one cam with different (run/pause time) settings. This diagram can be used to set the open cam or the close cam. The same procedure is used for both cams. The next page explains in more detail how the upper and lower tabs of one cam determine if the time is run or pause.

Diagram #1

Setting the Run and Pause Times on the Open or Close Cams

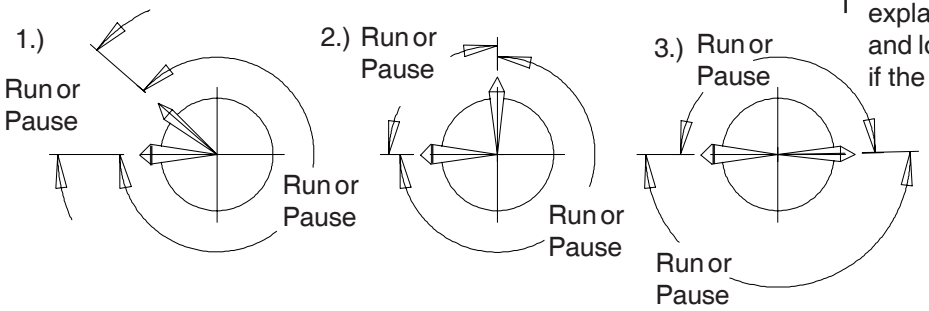

1.) 45° Apart = 37.5 Sec. Run or Pause, 4 Min. & 22.5 Sec. Run or Pause
2.) 90° Apart = 1 Min. 15 Sec. Run or Pause, 3 Min. & 45 Sec. Run or Pause
3.) 180° Apart = 2 Min. & 30 Sec. Run or Pause, 2 Min. & 30 Sec. Run or Pause
4.) Any Combination of (Run/Pause) Times Within Five Minutes

NOTE: The Next Page Explains Which Will be Run or Pause

Instructions for Setting Five Minute Adjustable Timer on the 507 Machine

As discussed on the previous page the amount of degrees between the upper and lower tabs on one cam determines the amount of run time and pause time for that circuit. However, when setting the timer it is important to first determine which tab starts the run time and which tab starts the pause time. (Fig. 6) shows typical cams with tabs. Note the location of the raised actuator on each tab. The tab with the actuator on the bottom half of the cam starts the run time. The tab with the actuator on the top half of the cam starts the pause time. The cam turns CCW when viewed from the top. To set the timer determine the amount of run time desired and set the tabs so the "start run" tab (actuator on bottom half of cam) reaches the switching mechanism first. Use diagram 1 to determine the approximate distance to the "start/pause" tab for typical run times. As stated before, each notch equals 2.5 seconds. It is recommended that the open and close run times be offset to prevent both circuits from being enabled at the same time.

Fig. 11

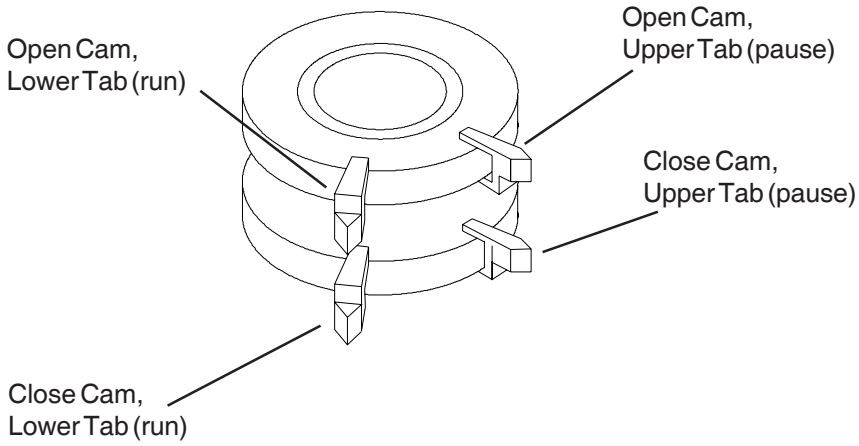

Top View of Open Cam

Diagram #2

Counter Clockwise Rotation

Lower Tab = Run Time

Upper Tab = Pause Time

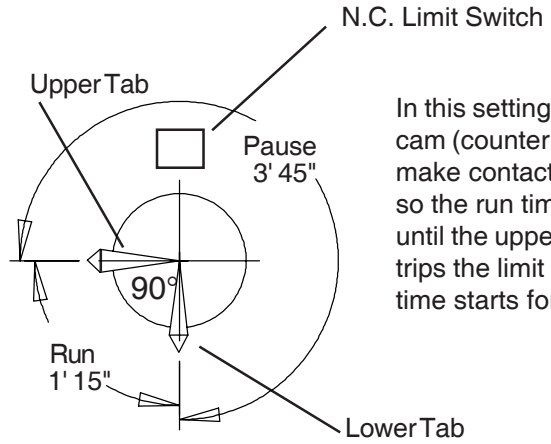

In this setting the lower tab on the open cam (counter clockwise rotation) will make contact with the limit switch first so the run time will be 1 min. & 15 sec. until the upper tab on the same cam trips the limit switch and the pause time starts for 3 min. & 45 sec.

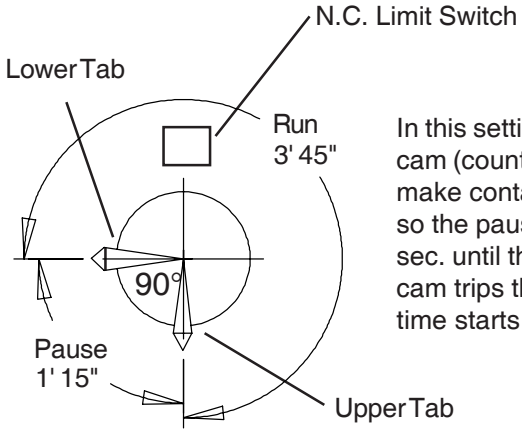

In this setting the upper tab on the open cam (counter clockwise rotation) will make contact with the limit switch first so the pause time will be 1 min. & 15 sec. until the lower tab on the same cam trips the limit switch and the run time starts for 3 min. & 45 sec.

506, 506S
Parts Breakdown

ITEM #	DESCRIPTION / PART NUMBER (IN BOLD)
1	Belt / Motor guard / **1462A**
2	V-belt 26" / **1351**
3	Sheave, 4.95" dia. x 5/8" bore / **1423**
4	Bolt, 5/16"-18 x 3" / **S-7086**
5	Flat washer, 3/8" x 1 1/2" x 1/4" / **8092**
6	Gearbox (slow) / **1333-12**
6A	Gearbox (fast) / **1333-2**
7	Bolt, 5/16"-18 x 3/4" / **S-4275**
8	Hex nut, 5/16"-18 / **S-396**
9	Sheave, 3.00" dia. x 1/2" bore / **1412**
10	Motor 1/2 hp, 1phase, 60hz, 1625RPM / **1439**
11	Lockwasher, 5/16" / **S-1147**
12	Carriage Bolt, 5/16"-18 x 3/4" / **S-6076**
13	Motor Base / **1105**
14	Bolt, 3/8"-16 x 1" / **S-455**
15	Hex nut, 3/8"-16 / **S-456**
16	Shear Pin, 7/32" x 1 1/4" / **1342**
17	Drive Shaft 3/4" threaded / **1111**
18	Fiber Washer for Drive Shaft / **3406**
19	Bolt, 5/16"-18 x 1" / **S-1146**
20	Pillow Block Bearing 3/4" / **1292**
21	Piano Wire Connector, 1/4" x 1 5/8" / **1343**
22	Aluminum Grooved Drum 1 5/8" / **1121**
22A	Aluminum Grooved Drum 2 3/4" / **1122**
23	Bolt, 3/8"-16 x 1" / **S-455**
24	Flat Washer, 3/8" / **S-248**
25	Concrete Nail 1 1/2" long / **1885**
26	Nonwelded Galvanized Base / **1100**

ITEM #	DESCRIPTION / PART NUMBER (IN BOLD)
27	Set Screw, 1/4"-20 x 1/2" type B / **S-2742**
28	Limit Switch Kit / **AC1572**
29	Limit Switch Actuator / **1126**
30	Screw, 10-32 x 3/8" / **S-8975**
31	Screw, #6-32 x 5/8" / **8658**
32	Weld Nut, #10-32 with 1" centers / **1531A**
33	Weld Nut, #6-32 with 1" centers / **S-7148**
34	T-bar / **1522**
35	Cap plug, 7/8" / **4578**
36	Liquid Tight Connector 3/4" / **FH-7053**
37	Terminal Block, 6 pole 2 row / **1763**
38	Eagle Signal 4-circuit timer / **1738**
39	Mov (Voltage protection up to 600V) / **1630**
40	Hour Timer Switch, SPST, on-off / **1761**
41	Hinged Enclosure 12" x 12" x 4" / **1514**
42	Reversing Relay AC / **1558**
43	Raise-Off-Lower Switch / **1775**
44	Manual - Auto Switch SPDT / **1776**
45	Terminal Block 4 pole 2 row / **1773**
46	Hex Nut, #8-32 / **S-6525**
47	Front Plate, (blank) / **1779**
48	Front Plate, (wired) / **1777**
49	Screw, #8-32 x 1/4" / **8821**
50	Drum Guard - Cover / **AC1520**
51	Sprocket Base / **1100S**
52	Sprocket Shaft / **1111B**
53	Sprocket, 24 teeth / **1847**
54	Actuator nut / **S-1102**

KIT #'s	DESCRIPTION / PART NUMBERS
AC1572	Limit Switch kit: (1) Limit Switch **1572**, (1) Cover **1573**, (1) #6-32 Weld Nut **S-7148**, (2) #6-32 x 1½ **S-7181**, (2) #6-32 Wing Nuts **8657**
1777	Front Plate Wired: (1) Push Button Switch **1754**, (1) Manual Switch **1776**, (1) Terminal Block 4pole / 2row **1773**
1382A	Aircraft Cable, 1 set: 5/32, 7 x 19 (2) 16' pcs.
AC1568	(1) Whisker Limit Switch **1568**, (1) Cover **1573**, (1) #6-32 Weld Nut **S-7148**, (2) #6-32 x 2 1/2" **8682**, (2) Wing Nuts **8657**

506, 506S
Exploded View

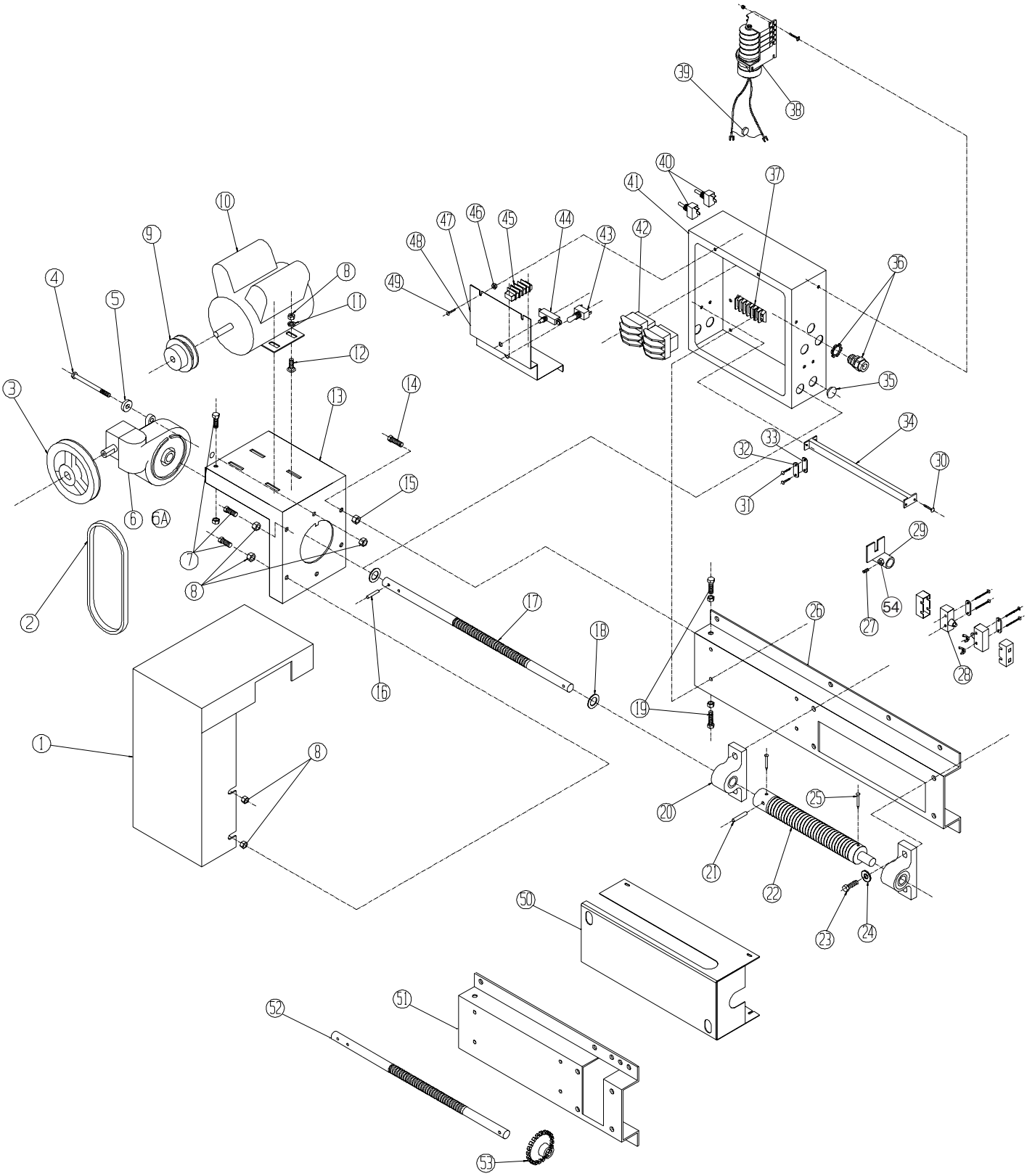

507, 507S
Parts Breakdown

ITEM #	DESCRIPTION / PART NUMBER (IN BOLD)
1	Belt / Motor guard / **1462A**
2	V-belt 26" / **1351**
3	Sheave, 4.95" dia. x 5/8" bore / **1423**
4	Bolt, 5/16"-18 x 3" / **S-7086**
5	Flat washer, 3/8" x 1 1/2" x 1/4" / **8092**
6	Gearbox (slow) / **1333-12**
6A	Gearbox (fast) / **1333-2**
7	Bolt, 5/16"-18 x 3/4" / **S-4275**
8	Hex nut, 5/16"-18 / **S-396**
9	Sheave, 3.00" dia. x 1/2" bore / **1412**
10	Motor 1/2 hp, 1phase, 60hz, 1625RPM / **1439**
11	Lockwasher, 5/16" / **S-1147**
12	Carriage Bolt, 5/16"-18 x 3/4" / **S-6076**
13	Motor Base / **1105**
14	Bolt, 3/8"-16 x 1" / **S-455**
15	Hex nut, 3/8"-16 / **S-456**
16	Shear Pin, 7/32" x 1 1/4" / **1342**
17	Drive Shaft 3/4" threaded / **1111**
18	Fiber Washer for Drive Shaft / **3406**
19	Bolt, 5/16"-18 x 1" / **S-1146**
20	Pillow Block Bearing 3/4" / **1292**
21	Piano Wire Connector, 1/4" x 1 5/8" / **1343**
22	Aluminum Grooved Drum 1 5/8" / **1121**
22A	Aluminum Grooved Drum 2 3/4" / **1122**
23	Bolt, 3/8"-16 x 1" / **S-455**

ITEM #	DESCRIPTION / PART NUMBER (IN BOLD)
24	Flat Washer, 3/8" / **S-248**
25	Concrete Nail 1 1/2" long / **1885**
26	Nonwelded Galvanized Base / **1100**
27	Set Screw, 1/4"-20 x 1/2" type B / **S-2742**
28	Limit Switch Kit / **AC1572**
29	Limit Switch Actuator / **1126**
30	Screw, 10-32 x 3/8" / **S-8975**
31	Screw, #6-32 x 5/8" / **8658**
32	Weld Nut, #10-32 with 1" centers / **1531A**
33	Weld Nut, #6-32 with 1" centers / **S-7148**
34	T-bar / **1522**
35	Cap plug, 7/8" / **4578**
36	Liquid Tight Connector 3/4" / **FH-7053**
37	Terminal Block, 6 pole 2 row / **1763**
38	Eagle Signal 2-circuit timer / **1737**
39	Mov (Voltage protection up to 600V) / **1630**
40	Hour Timer Switch, SPST, on-off / **1761**
41	Hinged Enclosure 12" x 12" x 4" / **1514**
42	Reversing Relay AC / **1558**
43	Raise-Off-Lower Switch / **1775**
44	Manual - Auto Switch SPDT / **1776**
45	Terminal Block 4 pole 2 row / **1773**
46	Hex Nut, #8-32 / **S-6525**
47	Front Plate, (blank) / **1779**
48	Front Plate, (wired) / **1777**
49	Screw, #8-32 x 1/4" / **8821**
50	Drum Guard - Cover / **AC1520**
51	Actuator nut / **S-1102**

KIT #'s	DESCRIPTION / PART NUMBERS
AC1572	Limit Switch kit: (1) Limit Switch **1572**, (1) Cover **1573**, (1) #6-32 Weld Nut **S-7148**, (2) #6-32 x 1½ **S-7181**, (2) #6-32 Wing Nuts **8657**
1777	Front Plate Wired: (1) Push Button Switch **1754**, (1) Manual Switch **1776**, (1) Terminal Block 4pole / 2row **1773**
1382A	Aircraft Cable, 1 set: 5/32, 7 x 19 (2) 16' pcs.
AC1568	(1) Whisker Limit Switch **1568**, (1) Cover **1573**, (1) #6-32 Weld Nut **S-7148**, (2) #6-32 x 2 1/2" **8682**, (2) Wing Nuts **8657**

507, 507S
Exploded View

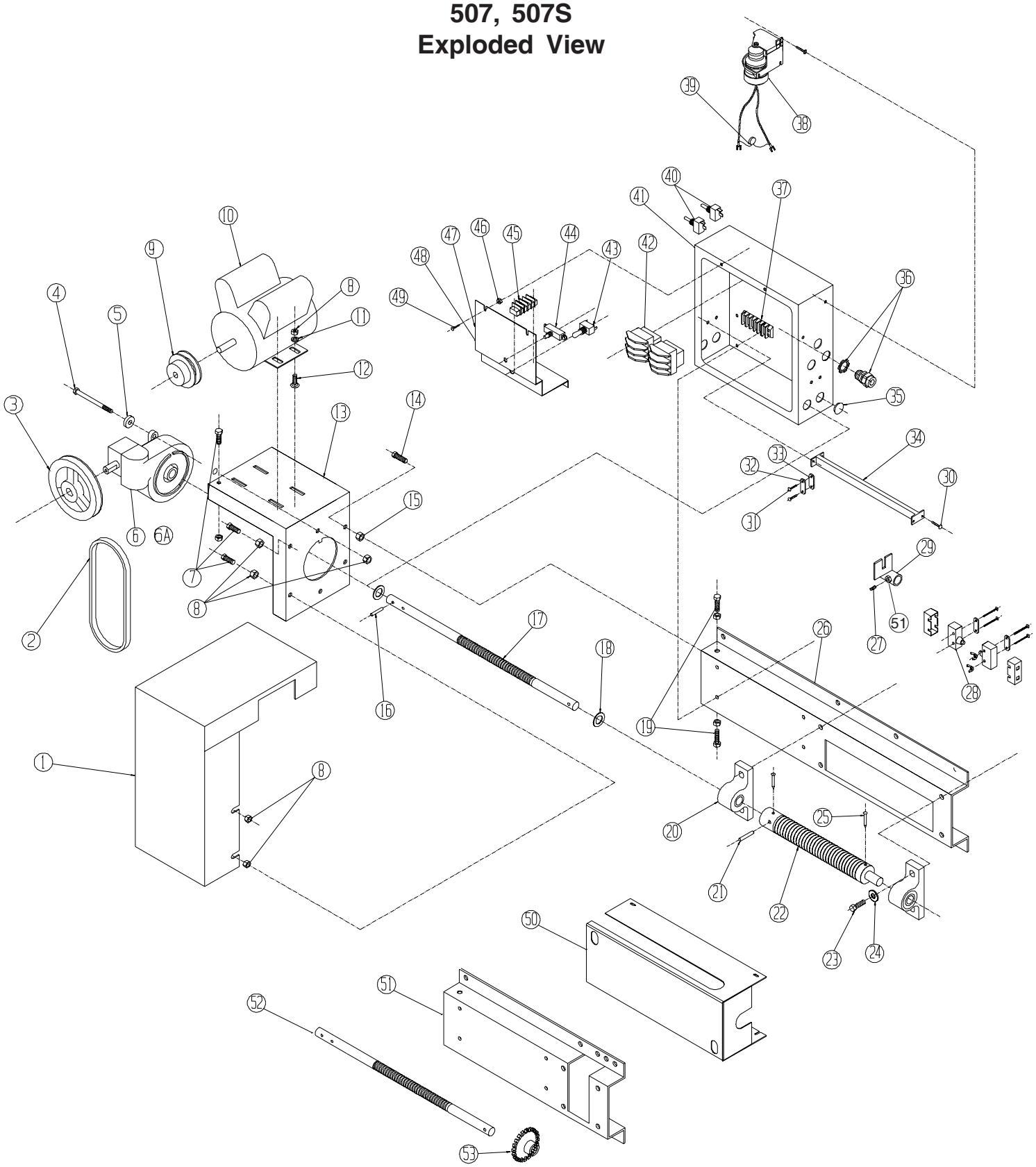

511, 511S
Parts Breakdown

ITEM #	DESCRIPTION / PART NUMBER (IN BOLD)
1	Belt / Motor guard / **1462A**
2	V-belt 26" / **1351**
3	Sheave, 4.95" dia. x 5/8" bore / **1423**
4	Bolt, 5/16"-18 x 3" / **S-7086**
5	Flat washer, 3/8" x 1 1/2" x 1/4" / **8092**
6	Gearbox (slow) / **1333-12**
6A	Gearbox (fast) / **1333-2**
7	Bolt, 5/16"-18 x 3/4" / **S-4275**
8	Hex nut, 5/16"-18 / **S-396**
9	Sheave, 3.00" dia. x 1/2" bore / **1412**
10	Motor 1/2 hp, 1phase, 60hz, 1625RPM / **1439**
11	Lockwasher, 5/16" / **S-1147**
12	Carriage Bolt, 5/16"-18 x 3/4" / **S-6076**
13	Motor Base / **1105**
14	Bolt, 3/8"-16 x 1" / **S-455**
15	Hex nut, 3/8"-16 / **S-456**
16	Shear Pin, 7/32" x 1 1/4" / **1342**
17	Drive Shaft 3/4" threaded / **1111**
18	Fiber Washer for Drive Shaft / **3406**
19	Bolt, 5/16"-18 x 1" / **S-1146**
20	Pillow Block Bearing 3/4" / **1292**
21	Piano Wire Connector, 1/4" x 1 5/8" / **1343**
22	Aluminum Grooved Drum 1 5/8" / **1121**
22A	Aluminum Grooved Drum 2 3/4" / **1122**
23	Bolt, 3/8"-16 x 1" / **S-455**
24	Flat Washer, 3/8" / **S-248**
25	Concrete Nail 1 1/2" long / **1885**

ITEM #	DESCRIPTION / PART NUMBER (IN BOLD)
26	Nonwelded Galvanized Base / **1100**
27	Set Screw, 1/4"-20 x 1/2" type B / **S-2742**
28	Limit Switch Kit / **AC1572**
29	Limit Switch Actuator / **1126**
30	Screw, 10-32 x 3/8" / **S-8975**
31	Screw, #6-32 x 5/8" / **8658**
32	Weld Nut, #10-32 with 1" centers / **1531A**
33	Weld Nut, #6-32 with 1" centers / **S-7148**
34	T-bar / **1522**
35	Cap plug, 7/8" / **4578**
36	Liquid Tight Connector 3/4" / **FH-7053**
37	Terminal Block, 6 pole 2 row / **1763**
38	Hour Timer Switch, SPST, on-off / **1761**
39	Hinged Enclosure 12" x 12" x 4" / **1514**
40	Reversing Relay AC / **1558**
41	Raise-Off-Lower Switch / **1775**
42	Manual - Auto Switch SPDT / **1776**
43	Terminal Block 4 pole 2 row / **1773**
44	Hex Nut, #8-32 / **S-6525**
45	Front Plate, (blank) / **1779**
46	Front Plate, (wired) / **1777**
47	Screw, #8-32 x 1/4" / **8821**
48	Drum Guard - Cover / **AC1520**
49	Sprocket Base / **1100S**
50	Sprocket Shaft / **1111B**
51	Sprocket, 24 teeth / **1847**
52	Actuator nut / **S-1102**

KIT #'s	DESCRIPTION / PART NUMBERS
AC1572	Limit Switch kit: (1) Limit Switch **1572**, (1) Cover **1573**, (1) #6-32 Weld Nut **S-7148**, (2) #6-32 x 1½ **S-7181**, (2) #6-32 Wing Nuts **8657**
1777	Front Plate Wired: (1) Push Button Switch **1754**, (1) Manual Switch **1776**, (1) Terminal Block 4pole / 2row **1773**
1382A	Aircraft Cable, 1 set: 5/32, 7 x 19 (2) 16' pcs.
AC1568	(1) Whisker Limit Switch **1568**, (1) Cover **1573**, (1) #6-32 Weld Nut **S-7148**, (2) #6-32 x 2 1/2" **8682**, (2) Wing Nuts **8657**

511, 511S
Exploded View

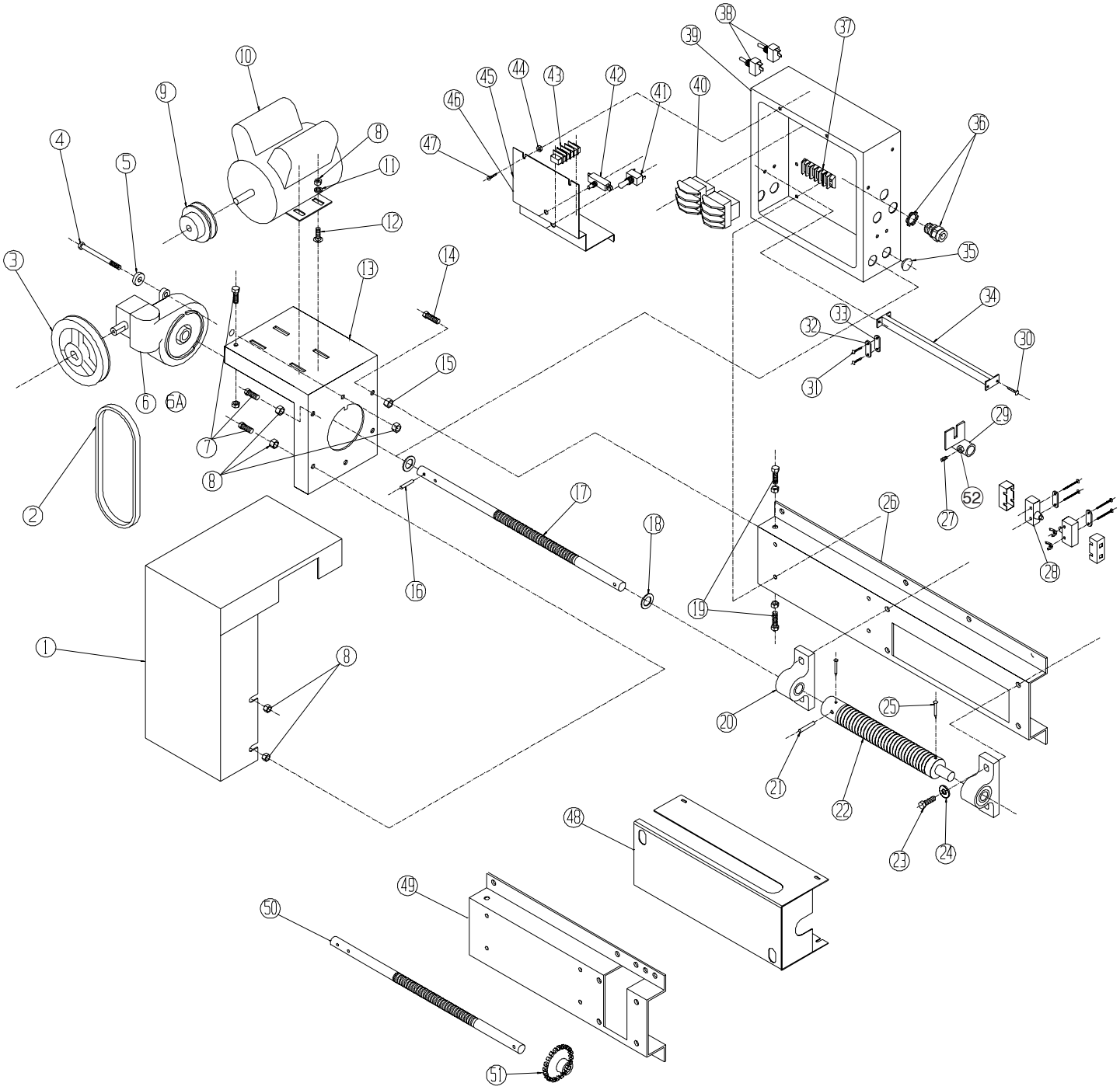

GEARBOX EXPLODED VIEW

Front View

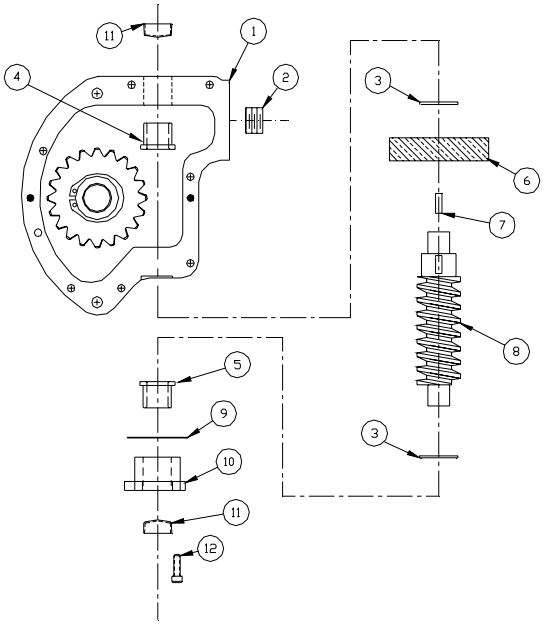

Cover Assembly

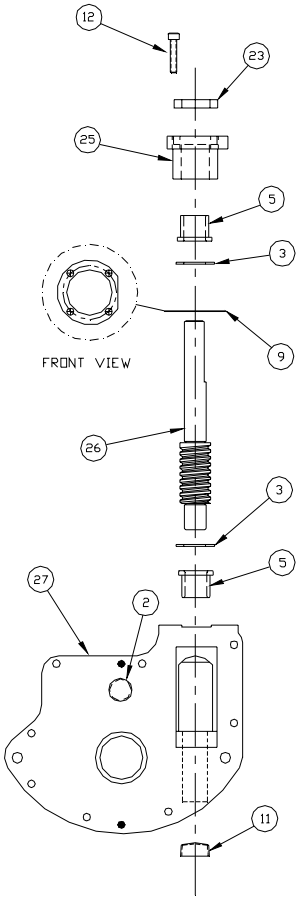

Side View

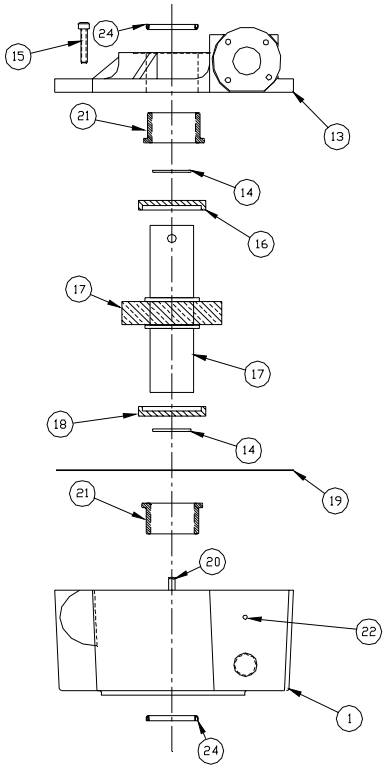

Out Put Gear Assembly

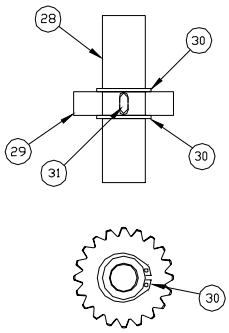

GEARBOX DESCRIPTION AND PART NUMBERS

Note: The part numbers are dependant on which gearbox you have. Please use the letter denoting the appropriate gearbox (A,B,or C below). You will find the quantities listed for replacement on the right hand side of the page.

A) 200:1 Red Primer - GSI part #1333-2
B) 400:1 Black - GSI part #1333F (no longer used)
C) 1200:1 Gray - GSI part #1333-12

			QUANTITIES		
PART #	ITEM #	DESCRIPTION	A	B	C
4487	1	Gear Box Housing	1	1	1
4488	2	Pipe Plug	2	2	2
4481	3	Thrust Washers	4	4	4
4482	4	Bronze Bushing	1	1	1
4483	5	Bronze Bushing	3	3	3
4489	6	Worm Gear	1	0	0
4490	6	Worm Gear	0	1	0
4474	6	Worm Gear	0	0	1
4491	7	Woodruff Key	1	1	1
4492	8	Intermediate Worm Gear	1	0	0
4493	8	Intermediate Worm Gear	0	1	0
4494	8	Intermediate Worm Gear	0	0	1
4479	9	Bearing Retainer Gasket	2	2	2
4495	10	Bearing Retainer	1	1	1
4486	11	Drive Plug	2	2	2
4477	12	10-24 x 5/8" Socket Head Cap Screw	8	8	8
	13	Cover Assembly	1	0	0
	13	Cover Assembly	0	1	0
	13	Cover Assembly	0	0	1
4499	14	Thrust Washers	2	2	2
4500	15	10-24 x 5/8" Socket Head Cap Screw	8	8	8
4706	16	Snap Ring Retainer - Cover Side	1	1	1
	17	Out Put Gear Assembly	1	0	0
	17	Out Put Gear Assembly	0	1	0
	17	Out Put Gear Assembly	0	0	1
4710	18	Snap Ring Retainer - Gear Box Side	1	1	1
4475	19	Gear Box Gasket	1	1	1
4711	20	Dowel Pin	2	2	2
4712	21	Bronze Bushing	2	2	2
4713	22	Vent Screw	1	1	1
4785	23	Oil Seal	1	1	1
4476	24	Oil Seal	2	2	2
4478	25	Cover Bearing Retainer	1	1	1
4714	26	Input Worm Shaft	1	0	0
4715	26	Input Worm Shaft	0	1	0
4480	26	Input Worm Shaft	0	0	1
4716	27	Gear Box Cover	1	1	1
4484	28	Main Shaft	1	1	1
4717	29	Out Put Worm Gear	1	0	0
4718	29	Out Put Worm Gear	0	1	0
4719	29	Out Put Worm Gear	0	0	1
4720	30	Snap Ring	2	2	2
4721	31	Radius Key	1	1	1

AC180 - A Installation Kit
(Purchased Separately)

AC1820 ASSEMBLY

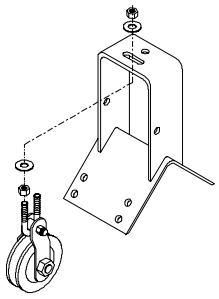

ITEM	DESCRIPTION	QTY.	PART #
A	Bracket Outside Corner	1	1820
B	3/8" Wrought Iron Washer	4	S-248
C	3/8" - 16 Hex Nut	4	S-456
D	U - Bolt 1" Center	1	1835
E	3" CI Pulley w/Needle Bearing	1	1902AA

AC1821 ASSEMBLY

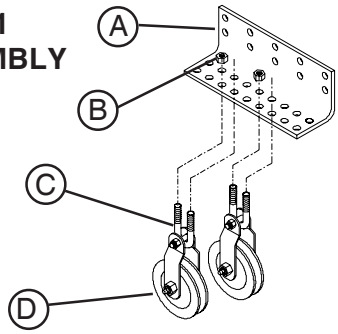

ITEM	DESCRIPTION	QTY.	PART #
A	Bracket - 3" x 3" x 9"	1	1821
B	3/8" - 16 Hex Nut	4	S-456
C	U - Bolt 1" Center	2	1835
D	3" CI Pulley w/Needle Bearing	2	1902AA

AC1822 ASSEMBLY

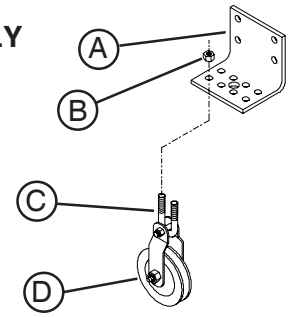

ITEM	DESCRIPTION	QTY.	PART #
A	Bracket - 3" x 3" x 3"	1	1822
B	3/8" - 16 Hex Nut	2	S-456
C	U - Bolt 1" Center	1	1835
D	3" CI Pulley w/Needle Bearing	1	1902AA

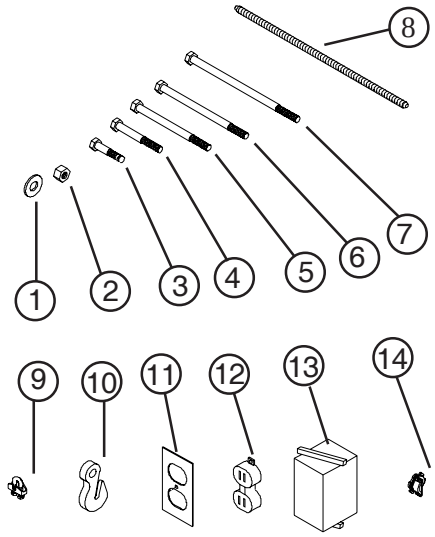

ITEM	DESCRIPTION	QTY.	PART #
1	3/8" Wrought Iron Washer	50	S-248
2	3/8" - 16 Hex Nut	20	S-456
3	3/8" - 16 x 2" Bolt	5	S-7203
4	3/8" - 16 x 3" Bolt	6	S-7247
5	3/8" - 16 x 5" Bolt	2	S-7373
6	3/8" - 16 x 6" Bolt	2	S-7248
7	3/8" - 16 x 7" Bolt	4	8170
8	3/8" x 12" Full Threaded Rod	4	8195
9	3/16" Cable Clamp	11	07097399
10	1/4" Grab Hook	2	1926
11	Handy Box Cover	1	1780
12	Duplex Receptacle 115V w/Grd.	1	1781
13	Handy Box , Surface Nail On	1	1785
14	1/2" Romex Connector	1	1782

NOTE: ASSEMBLY PARTS CAN BE PURCHASED SEPARATELY

AC180 - B Installation Kit
(Purchased Separately)

AC1821 ASSEMBLY

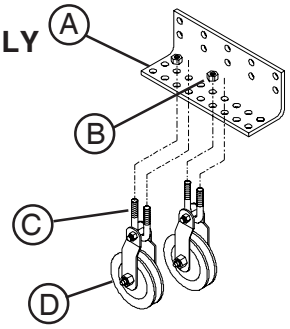

ITEM	DESCRIPTION	QTY.	PART #
A	Bracket - 3" x 3" x 9"	1	1821
B	3/8" - 16 Hex Nut	4	S-456
C	U - Bolt 1" Center	2	1835
D	3" CI Pulley w/Needle Bearing	2	1902AA

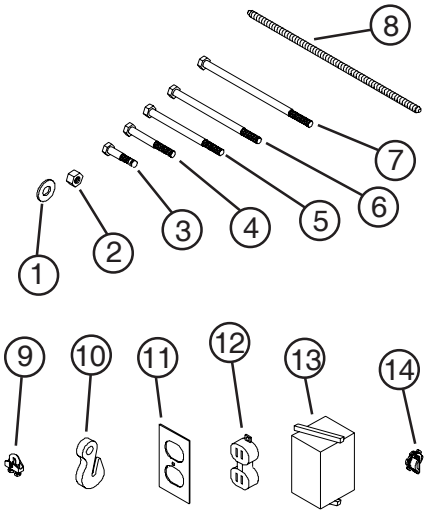

1	3/8" Wrought Iron Washer	50	S-248
2	3/8" - 16 Hex Nut	20	S-456
3	3/8" - 16 x 2" Bolt	3	S-7203
4	3/8" - 16 x 3" Bolt	3	S-7247
5	3/8" - 16 x 5" Bolt	2	S-7373
6	3/8" - 16 x 6" Bolt	2	S-7248
7	3/8" - 16 x 7" Bolt	2	8170
8	3/8" x 12" Full Threaded Rod	4	8195
9	3/16" Cable Clamp	8	07097399
10	1/4" Grab Hook	2	1926
11	Handy Box Cover	1	1780
12	Duplex Receptacle 115V w/Grd.	1	1781
13	Handy Box , Surface Nail On	1	1785
14	1/2" Romex Connector	1	1782

NOTE: ASSEMBLY PARTS CAN BE PURCHASED SEPARATELY

AC180-C Installation Kit
(Purchased Separately)

	ITEM	DESCRIPTION	QTY.	PART #
AC1821 ASSEMBLY 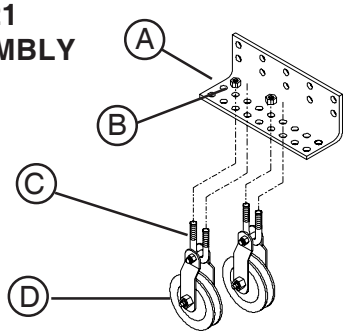	A	Bracket - 3" x 3" x 9"	1	1821
	B	3/8" - 16 Hex Nut	4	S-456
	C	U - Bolt 1" Center	2	1835
	D	Pulley, 3" w/ Shackle and Ndle.Bearing	2	1902AA
AC1824 ASSEMBLY 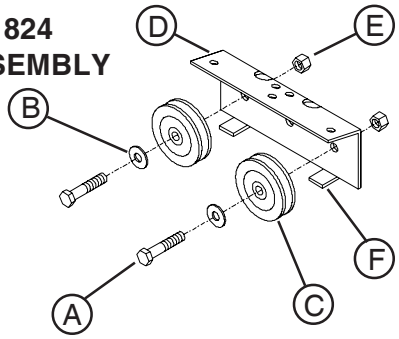	A	Bolt, 5/8 x 1	2	50-0091
	B	1/2" Wrought Iron Washer	2	CH-1043
	C	Pulley, 3" with Needle Bearing	2	50-0089
	D	Double Roller Bracket	1	1824
	E	Nut, 1/2"- 13 Deformed Lock-nut	2	S-6493
	F	Cable Bracket	2	50-0022
AC1824A ASSEMBLY 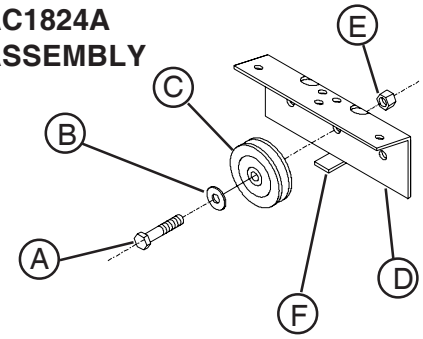	A	Bolt, 5/8 x 1	1	50-0091
	B	1/2" Wrought Iron Washer	1	CH-1043
	C	Pulley, 3" with Needle Bearing	1	50-0089
	D	Single Roller Bracket	1	1824
	E	Nut, 1/2"- 13 Deformed Lock-nut	1	S-6493
	F	Cable Bracket	1	50-0022
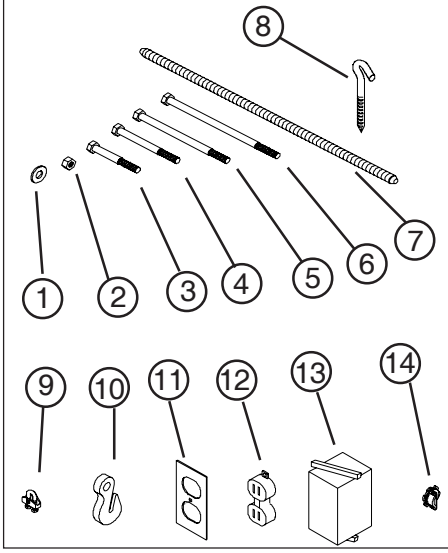	1	3/8" Wrought Iron Washer	50	S-248
	2	3/8" - 16 Hex Nut	20	S-456
	3	3/8" - 16 x 3" Bolt	6	S-7247
	4	3/8" - 16 x 5" Bolt	2	S-7373
	5	3/8" - 16 x 6" Bolt	2	S-7248
	6	3/8" - 16 x 7" Bolt	4	8170
	7	3/8" x 12" Full Threaded Rod	4	8195
	8	J - Hook 3/8" x 4"	2	1928
	9	3/16" Cable Clamp	22	07097399
	10	1/4" Grab Hook	4	1926
	11	Handy Box Cover	1	1780
	12	Duplex Receptacle 115V w/Grd.	1	1781
	13	Handy Box , Surface Nail On	1	1785
	14	1/2" Romex Connector	1	1782

NOTE: ASSEMBLY PARTS CAN BE PURCHASED SEPARATELY

AC180-T Installation Kit
(Purchased Separately)

	ITEM	DESCRIPTION	QTY.	PART #
AC1821 ASSEMBLY 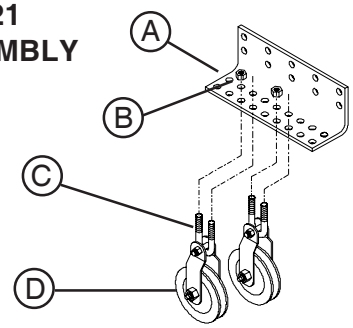	A	Bracket - 3" x 3" x 9"	1	1821
	B	3/8" - 16 Hex Nut	4	S-456
	C	U - Bolt 1" Center	2	1835
	D	Pulley, 3" w/ Shackle and Ndle.Bearing	2	1902AA
AC1824A ASSEMBLY 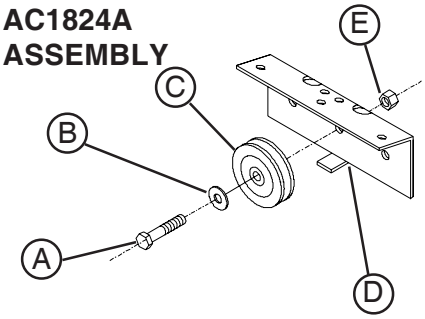	A	Bolt, 5/8 x 1	2	50-0091
	B	1/2" Wrought Iron Washer	2	CH-1043
	C	Pulley, 3" with Needle Bearing	2	50-0089
	D	Single Roller Bracket	2	1824A
	E	Nut, 1/2"- 13 Deformed Lock-nut	2	S-6493
	F	Cable Bracket	2	50-0022
AC1823 ASSEMBLY 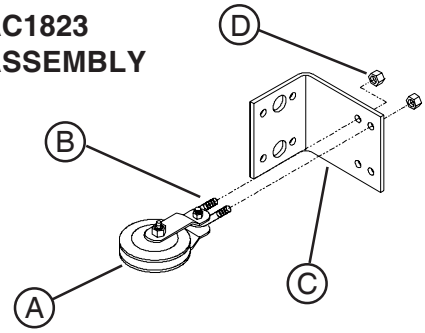	A	Pulley, 3" w/ Shackle and Ndle.Bearing	1	1902AA
	B	U - Bolt 1" Center	1	1835
	C	Bracket Through Wall	1	1823
	D	3/8" - 16 Hex Nut	2	S-456
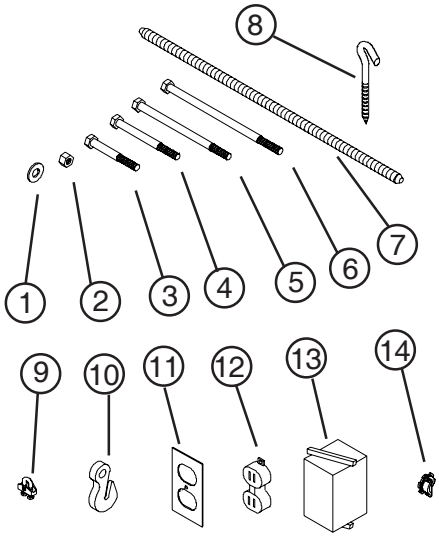	1	3/8" Wrought Iron Washer	50	S-248
	2	3/8" - 16 Hex Nut	20	S-456
	3	3/8" - 16 x 3" Bolt	6	S-7247
	4	3/8" - 16 x 5" Bolt	2	S-7373
	5	3/8" - 16 x 6" Bolt	2	S-7248
	6	3/8" - 16 x 7" Bolt	4	8170
	7	3/8" x 12" Full Threaded Rod	4	8195
	8	J - Hook 3/8" x 4"	2	1928
	9	3/16" Cable Clamp	22	07097399
	10	1/4" Grab Hook	4	1926
	11	Handy Box Cover	1	1780
	12	Duplex Receptacle 115V w/Grd.	1	1781
	13	Handy Box , Surface Nail On	1	1785
	14	1/2" Romex Connector	1	1782

NOTE: ASSEMBLY PARTS CAN BE PURCHASED SEPARATELY

Auto-Curtain Troubleshooting Guide
Section One

To use this guide: locate the numbered complaint / problem in **Section One**, then turn to **Section Two** (pages 26-27) and find the corresponding number. **Section Two** gives a more detailed instruction of how to correct the problem.

Problems:

I. The Auto-Curtain motor will not run in either manual or automatic modes, and makes no sound when the "manual switch" is moved to the "raise" and "lower" position.

Possible Causes:

- **A.** No electrical power to the Auto-Curtain (1)
- **B.** Bad limit switch (2)
- **C.** Bad reversing contactor (3)
- **D.** Bad door interlock-push switch (4)

If the limit switch actuator is against either the upper or lower limit switch, move the limit switch which the actuator is against away from the actuator and then see if the Auto-Curtain will run by pushing the manual switch in the direction of the limit switch that you moved back. See Number III below if this is the case.

If the Auto-Curtain still makes no sound and is not cut off in either direction by the limit switch, you have:

- **A.** No power to the Auto-Curtain (1)
- **B.** Bad interlock-push switch (4)

II. The Auto-Curtain motor will not run at all, and it is not against either limit switch. However, when the manual switch is pushed to "raise" and "lower" a crisp clicking or thumping sound is heard you have:

- **A.** Bad motor (5)

III. The Auto-Curtain motor will run in only one direction manually.

- **A.** Bad limit switch (2)
- **B.** Bad reversing relay coil (one side) (3)
- **C.** Bad contact points on relay (3)

IV. The Auto-Curtain will run in both directions, but the shaft or grooved drum does not turn.

- **A.** Loose pulley or belt (6)
- **B.** Sheared pin (7)
- **C.** Bad gear case (8)
- **D.** Broken Shaft (9)

Auto-Curtain Trouble Shooting Guide
Section One

V. The Auto-Curtain motor will run up and down in "manual", but does not run automatically up or down.

- **A.** Bad timer or timer motor (506,507) (10)
- **B.** Bad thermostat (1)
- **C.** Bad door interlock-push switch (4)

VI. The Auto-Curtain continuously runs up and down.

- **A.** Bad Thermostat (11)
- **B.** Thermostat lead pinched by staple
- **C.** Bad Timer Switch

VII. The Auto-Curtain motor buzzes, but does not run.

- **A.** Bad motor (5)
- **B.** Bad reversing contactor (3)
- **C.** Both of these (3) and (5)

VIII. Building gets too hot or cold before curtains or doors open or close.

- **A.** Thermostat is too near to a source of heat or cold location.
- **B.** Thermostat is in a location that the sun is shining on it at certain times.
- **C.** Thermostat is out of calibration

IX. Limit switch(s) broken.

- **A.** Sheared pin is allowing the shaft to overspin, causing the limit switches to break (7)
- **B.** Motor is failing to fall back into start-winding (5)
- **C.** Reversing contactor is sticking (3)
- **D.** The wingnuts which hold the limit switches on the t-bar are over tightened.

Auto-Curtain Trouble Shooting Guide
Section Two

(1) Electrical power to Auto-Curtain - Place test light leads on terminal block poles #1 and #2 to check for power. If no power, check:

- **A.** Power to outlet for plug
- **B.** All fuses or circuit breakers in line (replace or reset as required)
- **C.** Broken power cord

(2) Limit switches - break the power going to the magnetic coils of the reversing contactor in order to stop the curtain or door at its furthest point of travel. The plunger (when pushed in) should make

a small clicking sound as it is depressed in and out manually. Tightening the wing nuts that hold the limit switches on the t-bar too tightly can result in faulty operation or malfunction of the switch. To replace the switch: disconnect power, remove wing nuts, slide the back cover off the switch, remove the two wires (orange and brown) and reattach them exactly the same way to the new micro switch.

(3) Reversing contactor - conditions the electric motor to run either direction as called for by the thermostat, time clock, or manual switch. Applying 115 volts of electricity across the coil(s) from the center point to the outside of each coil should cause a magnetic action, in turn causing the power transfer points to close. Defective or bad coils will not react when electricity is applied. The power transfer points can be closed by pushing them closed by hand. If this is done when the power is "on" it should result in the motor running. There is also the possibility that the power points of the relay are not making satisfactory contact, thus prohibiting the electricity to flow across them to the electric motor. Field replacement of reversing contact coils or points is **NOT** recommended. If it is defective, replace the complete reversing contactor. The left side of the reversing contactor calls for the curtains or doors to close, and the right side to open the curtains or doors.

(4) Door interlock-push switch - is a single-pole, double-throw switch, when depressed will make a small clicking sound. This switch, when depressed by hand or by closing the door, allows electricity to the thermostat on the red or common wire to select the direction the curtains or doors will travel. When the door is open and the push-button is out, the electricity goes to the "raise"-"lower" switch where manual selection of "open" or "close" is done by hand.

(5) Power motor - the Auto-Curtain is powered by a totally enclosed, ball bearing 1/2 h.p., 48-frame motor capable of operation in both directions (clockwise and counterclockwise) from an external reversing contactor. The black and red wires are directional wires. The black and white wires or the red to white wires should show 115 volts between them. The white wire is a neutral and the green is ground. If the motor is for replacement and the motor is running in the wrong direction for the limit switches and the "raise"-"lower" switch, the direction of the motor can be reversed by swapping the red and black wires.

(6) Pulleys and Belts - there have been times when the set screws on the motor pulley or gear case pulley have worked loose, allowing the pulley to slip on the shaft. If this occurs, realign belt and tighten set screws as tight as possible. The V- belt should not be too tight, but should run loose with a 1/2" to 3/4" slack. The belt is a 26" size. If the belt is running excessively tight, bearing damage could result in the motor and gear case. Worn or cracked belts should be replaced.

(7) Shear pin - in the end of the gear case below the electric motor, there is a $^{7}/_{32}$" x 1 $^{1}/_{4}$" roll pin which connects the gear case to the drive shaft. At approximately 2,850 lbs. pressure this pin will shear, allowing the curtains or doors to open. When this occurs, there is usually an obstruction somewhere in the cable system prohibiting free movement of curtains or doors and causing great stress. You must free the cable and correct the obstruction. Inside each Auto-Curtain control box, there is an extra roll pin. Take a punch and knock out the old pin, align the holes and install the new roll pin. When the pin is sheared, you can see the outside hub of the gear case turning, but the $^{3}/_{4}$" shaft inside will not turn. The shear pin is necessary to prevent damage to the gear case if something hangs up.

Auto-Curtain Trouble Shooting Guide
Section Two

(8) Gear case - the gear case is a double worm gear 1,200:1 or 200:1 ratio. If the pulley shaft is turning, but the hub of the gear case is not turning, you have a stripped gear or worm. This is caused by from excessive pressure or lack of lubrication. Replace your gear case; we do not recommend field repairs of the gear case. The gear case is removed by taking out the shear pin, loosening the two retaining nuts and sliding the gear case from the 3/4" shaft.

(9) Broken shaft - to replace a shaft, remove the gear case and the set screw from the limit switch actuator. Next, remove the shear pin from the drum. Remove the cables and the bearings from the aluminum drum. Reinstall the new shaft.

(10) Timer and timer motor - inside the Auto-Curtain on Models **506** and **507** machine on the right is a five-minute timer powered by a small electric timer motor. When the machine is plugged in, you should always be able to see the timer cams turning very slowly. The cams control the timing stages when opening or closing. If this timer motor is not turning when the machine is plugged in, the timer motor is defective. The timer motor may be replaced by removing two screws beside the timer motor and disconnecting the electric leads. If there is a malfunction in the switch gear of timer, replace the complete timer unit.

(11) Thermostat - the thermostat is a two-stage heating and cooling unit in a totally enclosed nema 4X enclosure with a two-degree allowance between stages. You should be able to turn the thermostat knob slowly and hear two small clicks in each direction. Between these clicks should be very close to the room temperature. The coil on the outside of the thermostat case is filled with a gas that expands or contracts as the temperature as the temperatures changes, thus operating the thermostat switches. The red wire going to the thermostat is the common wire. The white wire calls for the curtains or doors to close, and the black wire calls for them to open. As you manually turn the thermostat knob to raise and lower the Auto-Curtain, it will not always respond immediately. It is connected within the Auto-Curtain in series with the five-minute timer. It could respond immediately or wait for as long as four minutes before responding, depending on where the timer cycle happens to be. There are a number of things that can cause seemingly incorrect thermostat temperatures. Theses include: sunshine on the thermostat; cold drafts; or dust insulating the sensing coil. Dust can completely clog up a thermostat. Regular cleaning by blowing out with compressed air is necessary in a dusty atmosphere. For testing purposes, you can simulate an increase in room temperature by holding your hand on the thermostat's coil for a full minute. You can further test a possible defective thermostat or thermostat wire by disconnecting, from the Auto-Curtain and putting a jumper wire between the red wire and the black wire to cause curtains or doors to open; likewise, a jumper wire between the red and white wires will cause the curtains or doors to close.

(12) Raise-lower hand switch - test by shorting from center to outside poles inside the inner door panel. This switch allows for manual operation of curtains.

NOTES

GSI GROUP

Limited Warranty

The GSI Group, LLC. ("GSI") warrants products which it manufactures to be free of defects in materials and workmanship under normal usage and conditions for a period of 12 months after sale to the original end-user or if a foreign sale, 14 months from arrival at port of discharge, whichever is earlier. The end-user's sole remedy (and GSI's only obligation) is to repair or replace, at GSI's option and expense, products that in GSI's judgment, contain a material defect in materials or workmanship. Expenses incurred by or on behalf of the end-user without prior written authorization from the GSI Warranty Group shall be the sole responsibility of the end-user.

Warranty Extensions: The Limited Warranty period is extended for the following products:

	Product	Warranty Period
AP Fans and Flooring	Performer Series Direct Drive Fan Motor	3 Years
	All Fiberglass Housings	Lifetime
	All Fiberglass Propellers	Lifetime
Cumberland Feeding/Watering Systems	Feeder System Pan Assemblies	5 Years **
	Feed Tubes (1.75" & 2.00")	10 Years *
	Centerless Augers	10 Years *
	Watering Nipples	10 Years *
Grain Systems	Grain Bin Structural Design	5 Years
Grain Systems Farm Fans Zimmerman	Portable & Tower Dryers	2 Years
	Portable & Tower Dryer Frames and Internal Infrastructure †	5 Years

* Warranty prorated from list price:
0 to 3 years – no cost to end-user
3 to 5 years – end-user pays 25%
5 to 7 years – end-user pays 50%
7 to 10 years – end user pays 75%

** Warranty prorated from list price:
0 to 3 years – no cost to end-user
3 to 5 years – end-user pays 50%

† Motors, burner components and moving parts not included. Portable Dryer screens included. Tower Dryer screens not included.

GSI further warrants that the portable and tower dryer frame and basket, excluding all auger and auger drive components, shall be free from defects in materials for a period of time beginning on the twelfth (12th) month from the date of purchase and continuing until the sixtieth (60th) month from the date of purchase (extended warranty period). During the extended warranty period, GSI will replace the frame or basket components that prove to be defective under normal conditions of use without charge, excluding the labor, transportation, and/or shipping costs incurred in the performance of this extended warranty.

Conditions and Limitations:

THERE ARE NO WARRANTIES THAT EXTEND BEYOND THE LIMITED WARRANTY DESCRIPTION SET FORTH ABOVE. SPECIFICALLY, GSI MAKES NO FURTHER WARRANTY OF ANY KIND, EXPRESS OR IMPLIED, INCLUDING, WITHOUT LIMITATION, WARRANTIES OF MERCHANTABILITY OR FITNESS FOR A PARTICULAR PURPOSE OR USE IN CONNECTION WITH: (i) PRODUCT MANUFACTURED OR SOLD BY GSI OR (ii) ANY ADVICE, INSTRUCTION, RECOMMENDATION OR SUGGESTION PROVIDED BY AN AGENT, REPRESENTATIVE OR EMPLOYEE OF GSI REGARDING OR RELATED TO THE CONFIGURATION, INSTALLATION, LAYOUT, SUITABILITY FOR A PARTICULAR PURPOSE, OR DESIGN OF SUCH PRODUCTS.

GSI shall not be liable for any direct, indirect, incidental or consequential damages, including, without limitation, loss of anticipated profits or benefits. The sole and exclusive remedy is set forth in the Limited Warranty, which shall not exceed the amount paid for the product purchased. This warranty is not transferable and applies only to the original end-user. GSI shall have no obligation or responsibility for any representations or warranties made by or on behalf of any dealer, agent or distributor.

GSI assumes no responsibility for claims resulting from construction defects or unauthorized modifications to products which it manufactured. Modifications to products not specifically delineated in the manual accompanying the equipment at initial sale will void the Limited Warranty.

This Limited Warranty shall not extend to products or parts which have been damaged by negligent use, misuse, alteration, accident or which have been improperly/inadequately maintained. This Limited Warranty extends solely to products manufactured by GSI.

Prior to installation, the end-user has the responsibility to comply with federal, state and local codes which apply to the location and installation of products manufactured or sold by GSI.

THIS EQUIPMENT SHALL BE INSTALLED IN ACCORDANCE WITH THE CURRENT INSTALLATION CODES AND APPLICABLE REGULATIONS WHICH SHOULD BE CAREFULLY FOLLOWED IN ALL CASES. AUTHORITIES HAVING JURISDICTION SHOULD BE CONSULTED BEFORE INSTALLATIONS ARE MADE.

THE GSI GROUP

The GSI Group, Inc.
P.O. Box 20, 1004 E. Illinois St.
Assumption, Il. 62510-0020
United States of America

Phone: (217) 226- 4421
Fax: (217) 226-3199
e-mail: gsisales@grainsystems.com
internet: http://www.grainsystems.com