DRAWING REVISIONS				
REV.:	BY:	DATE:	DESCRIPTION OF CHANGE	ECO NUMBER:
A	JFW	081106	ADDED HOLES FOR SHUTTER CLIPS 4X	RA1151

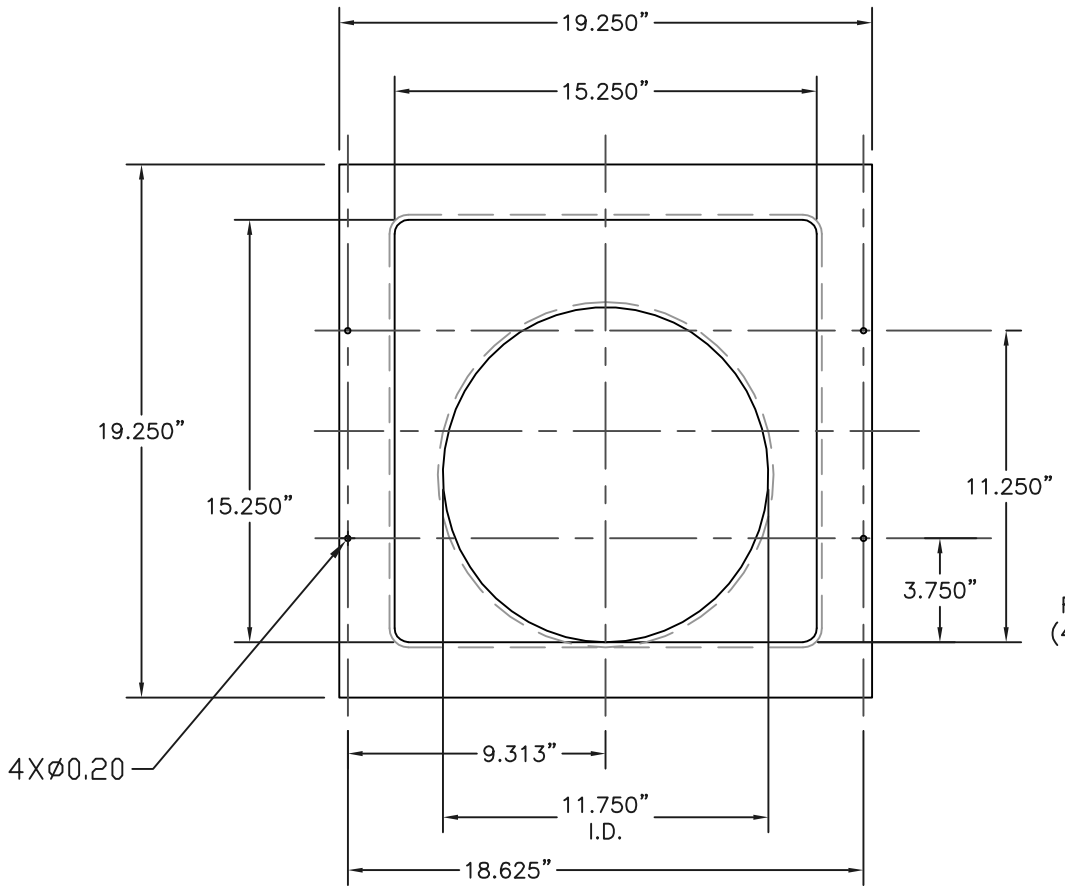

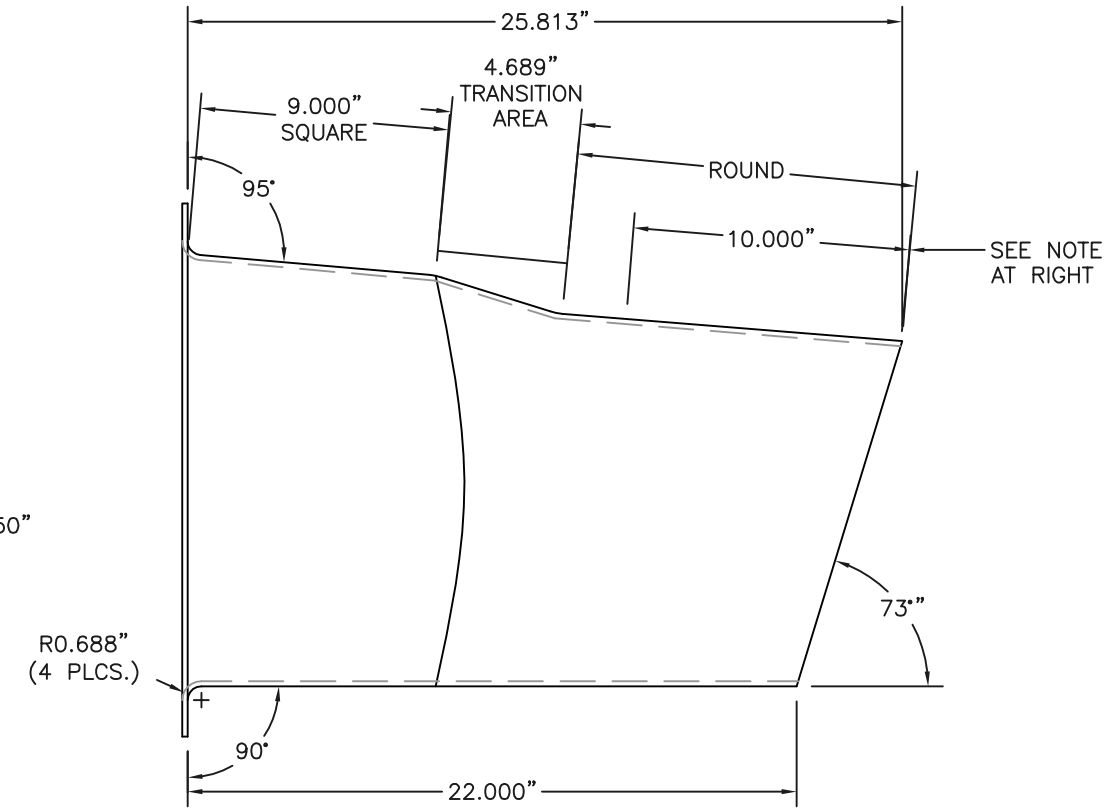

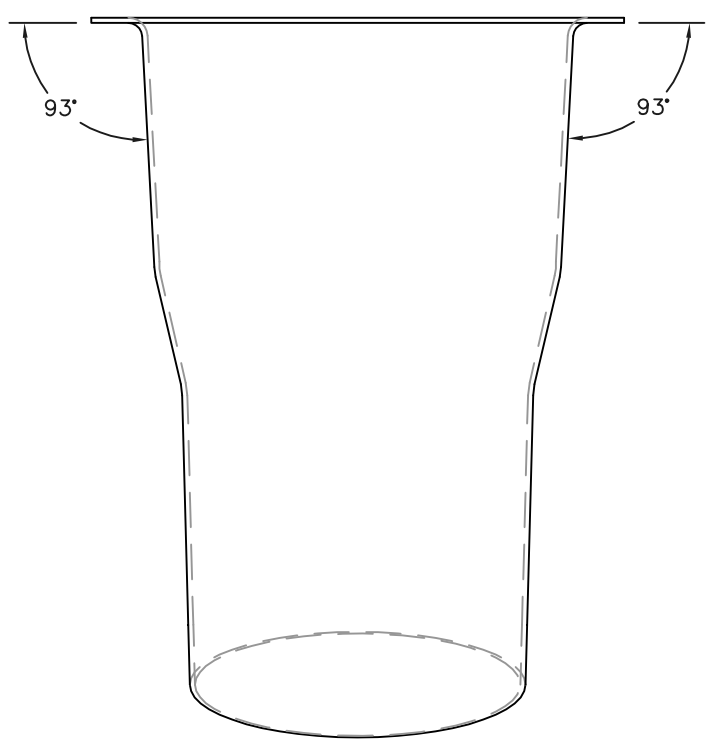

NOTE:

ALL INSIDE CORNERS SHALL HAVE A MINIMUM RADIUS OF .500" UNLESS OTHERWISE NOTED.

MATERIAL THICKNESS SHALL BE .1875".

ALL INSIDE SURFACES OF THE FAN HOUSING SHALL HAVE A WHITE SMOOTH GEL COAT FINISH.

ALL OUTSIDE SURFACES SHALL BE WHITE.

AT 10.000" FROM TOP OF ORIFICE THE INSIDE DIMENSIONS MUST BE A MINIMUM OF 12.5".

NOTE:

ALL DIMENSIONS SHOWN ARE FINAL INSIDE MEASUREMENTS. NO CONSIDERATIONS HAVE BEEN MADE TO ACCOUNT FOR MATERIAL OR CASTING SHRINKAGE.

TOLERANCES UNLESS OTHERWISE SPECIFIED FRACTIONS ± 1/32 DECIMALS INCH .X ± .030 .XX ± .020 .XXX ± .010 ANGLES ± 0°30'	DATE: 123102 DRAWN BY: MBF ENGR: APPROVED: DLR: NONE	FAN HOUSING FOR FW–1216 FAN DETAIL PART DRAWING	RAYDOT LLC Success Is In The Air 145 JACKSON AVE. SO., COKATO, MN. 55321
OLD DWG. # N/A		SCALE: NONE SHEET 1 OF 1	NEW DRAWING NUMBER FP805B